Product Data Sheet

1147 Universal (Single) Spring Wheel Series

AQPU (brown) Wheel Diameter × Wheel Width 150 x 42mm

EAN

KS-11470600602021

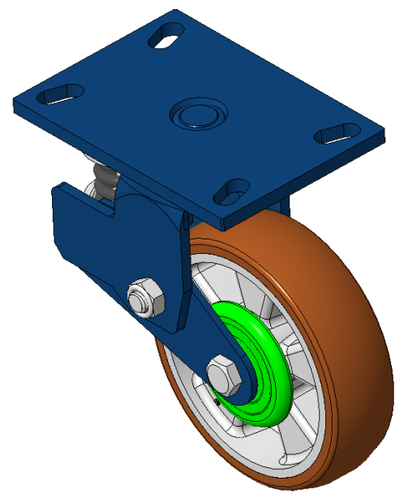

Picture may differ from original product

Swivel Spring-loaded Caster with Welded Caster Fork
Blue painted finish, Mounting Type - Top Plate, 129x74 Bolt Hole Spacing
Cast Iron core with High Quality Polyurethane Wheel Tread
Cast Iron brown, Bearing – Ball Bearings

Wheel tread: Made of high-quality polyurethane
Wheel Center: iron core/cast iron core

Drawings are for reference only and may differ from the product

Technical Data

◉ Imperial ○ Metric

Wheel Diameter	6 "
Wheel Width	1-11/16 "
Wheel Bearing	Wheels With Ball Bearings
Plate Size	6-3/8 " x 4-1/2 "
Bolt Hole Spacing	5-1/8“x2-7/8”
Plate Hole	15/16 " 9/16 "
Offset	1-15/16 "
Swivel Interference	10 "
Overall Height	7-15/16 "
Swivel Radius	5 "
Hardness Of Tread	92±5° Shore A
Load Capacity (Dynamic)	992lbs
Load Capacity (Static)	1488lbs
Temperature	-4°F to +158°F
Fork Type	Swivel Caster
Stainless	N/A
Electrical Conductivity	N/A
Anti-Static	N/A
Weight	14.5lbs
Standard	ISO22883

Advantages at a glance

Rolling Resistance	● ● ● ● ●
Operating Noise	● ● ● ● ●
Floor Surface Preservation	● ● ● ● ●

Dimensions

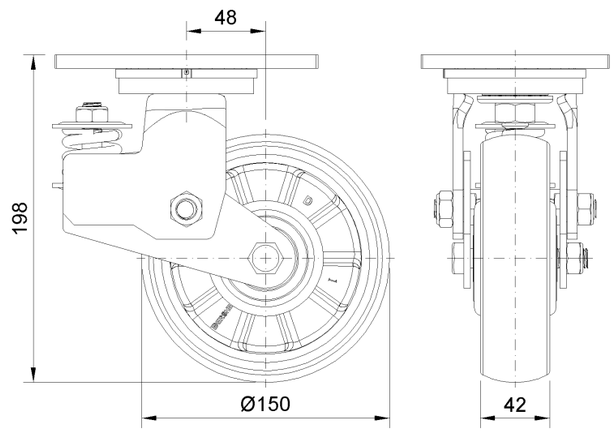

Mounting

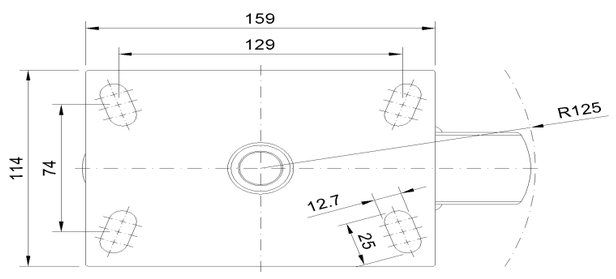

* For any deviation between metric and imperial spec, please refer to the metric spec.

© Copyright 2025 DershengInternational www.dersheng.com