Product Data Sheet

1147 Universal (Single) Spring Wheel Series

AQPU (brown) Wheel Diameter × Wheel Width 150 x 42mm

EAN

KS-11470600604021

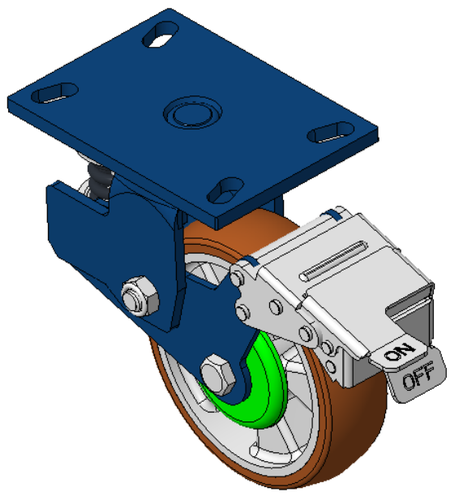

Picture may differ from original product

Spring-loaded Caster with front brake, Welded Caster Fork Blue painted finish, Mounting Type - Top Plate, 129x74 Bolt Hole Spacing Cast Iron core, High Quality Polyurethane Wheel Tread Cast Iron brown, Bearing – Ball Bearings

Wheel tread: Made of high-quality polyurethane

Wheel Center: iron core/cast iron core

Drawings are for reference only and may differ from the product

Technical Data

◉ Metric ○ Imperial

Wheel Diameter	150mm
Wheel Width	42mm
Wheel Bearing	Wheels With Ball Bearings
Plate Size	159 x 114mm
Bolt Hole Spacing	129.4 x 73.8mm
Plate Hole	25 x 12.7mm
Offset	48mm
Swivel Interference	376mm
Overall Height	198mm
Swivel Radius	188mm
Hardness Of Tread	92±5° Shore A
Load Capacity (Dynamic)	450kgs
Load Capacity (Static)	675kgs
Temperature	-20°C to +70°C
Fork Type	Swivel Caster With Front Brake
Stainless	N/A
Electrical Conductivity	N/A
Anti-Static	N/A
Weight	8.28kgs
Standard	ISO22883

Advantages at a glance

Rolling Resistance	● ● ● ● ●
Operating Noise	● ● ● ● ●
Floor Surface Preservation	● ● ● ● ●

Dimensions

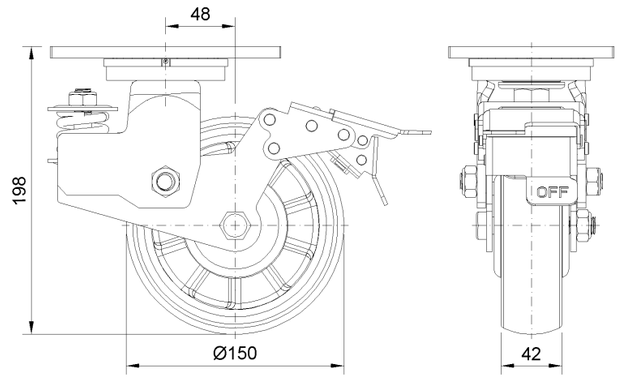

Mounting

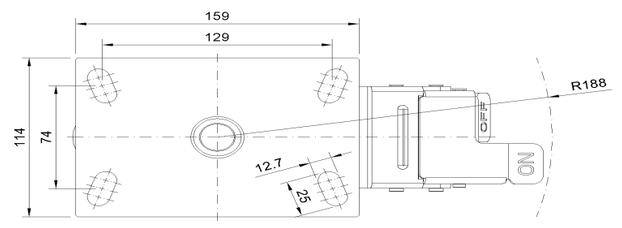

* For any deviation between metric and imperial spec, please refer to the metric spec.

© Copyright 2025 DershengInternational www.dersheng.com