Product Data Sheet

# 1147 Universal (Single) Spring Wheel Series

AQPU (brown) Wheel Diameter × Wheel Width 150 x 42mm

EAN

KS-11470600604021

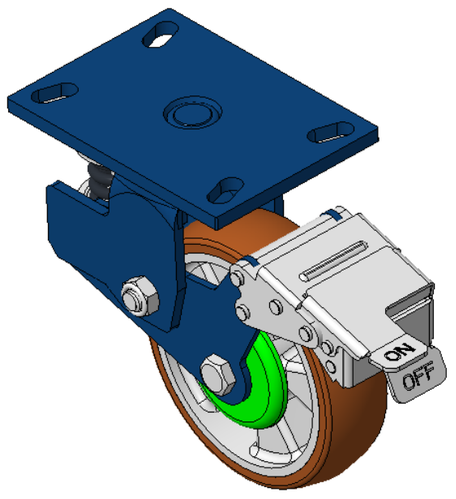


Picture may differ from original product

Spring-loaded Caster with front brake, Welded Caster Fork Blue painted finish, Mounting Type - Top Plate, 129x74 Bolt Hole Spacing Cast Iron core, High Quality Polyurethane Wheel Tread Cast Iron brown, Bearing – Ball Bearings

Wheel tread: Made of high-quality polyurethane

Wheel Center: iron core/cast iron core

Drawings are for reference only and may differ from the product

## Technical Data

◉ Imperial ○ Metric

| | |
|---|---|
| Wheel Diameter | 6 " |
| Wheel Width | 1-11/16 " |
| Wheel Bearing | Wheels With Ball Bearings |
| Plate Size | 6-3/8 " x 4-1/2 " |
| Bolt Hole Spacing | 5-1/8“x2-7/8” |
| Plate Hole | 1 " x 1/2 " |
| Offset | 1-15/16 " |
| Swivel Interference | 14-3/4” " |
| Overall Height | 7-15/16 " |
| Swivel Radius | 7-1/2 " |
| Hardness Of Tread | 92±5° Shore A |
| Load Capacity (Dynamic) | 992lbs |
| Load Capacity (Static) | 1488lbs |
| Temperature | -4°F to +158°F |
| Fork Type | Swivel Caster With Front Brake |
| Stainless | N/A |
| Electrical Conductivity | N/A |
| Anti-Static | N/A |
| Weight | 18.3lbs |
| Standard | ISO22883 |

## Advantages at a glance

| | |
|---|---|
| Rolling Resistance | ● ● ● ● ● |
| Operating Noise | ● ● ● ● ● |
| Floor Surface Preservation | ● ● ● ● ● |

## Dimensions

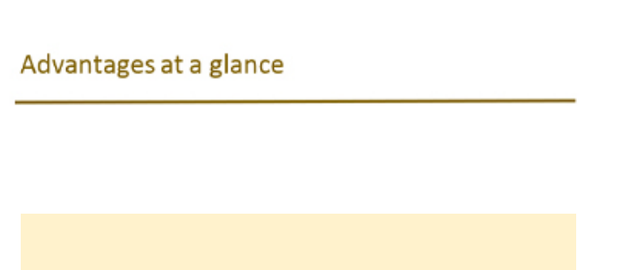


## Mounting

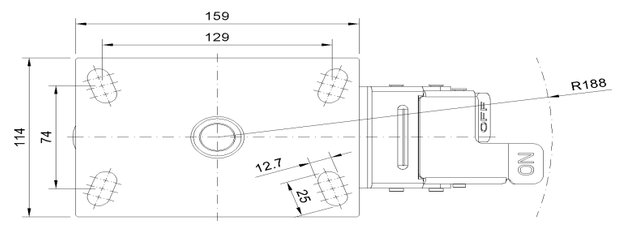


* For any deviation between metric and imperial spec, please refer to the metric spec.

© Copyright 2025 DershengInternational www.dersheng.com