1148-1 48 Series Central Locking Caster Series (All Plastic)

Central Control Double-Ball Classic Full-Effect Wheel (White-Dark Gray) Wheel Diameter × Wheel Width

EAN

KS-11480501458313



Picture may differ from original product

Drawings are for reference only and may differ from the product

Technical Data

◉ Imperial ○ Metric

Wheel Diameter	5 "
Wheel Width	11/16
Wheel Bearing	Wheels With Ball Bearings
Stem Diameter	1-5/16 "
Stem Length	2 "
Offset	1-9/16 "
Swivel Interference	8-1/2 "
Overall Height	6 "
Swivel Radius	4-1/4 "
Hardness Of Tread	72±5° Shore A
Load Capacity (Dynamic)	331lbs
Load Capacity (Static)	496lbs
Temperature	-4°F to +140°F
Fork Type	Swivel Caster With Total Brake
Stainless	N/A
Electrical Conductivity	N/A
Anti-Static	N/A
Weight	2.1lbs
Standard	ISO22881

Advantages at a glance

Rolling Resistance	●●●●●
Operating Noise	●●●●●
Floor Surface Preservation	●●●●●

Dimensions

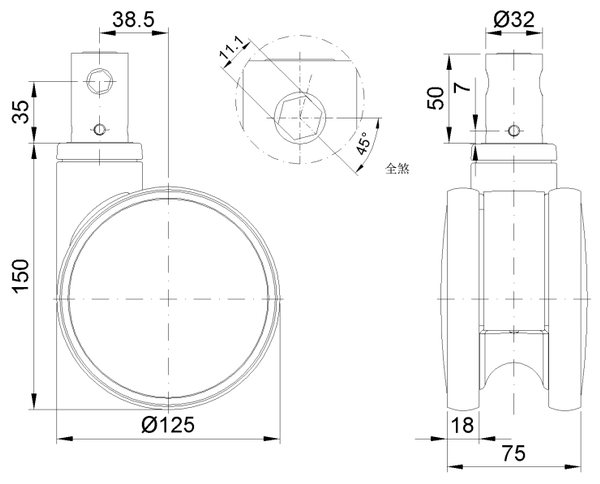

Mounting

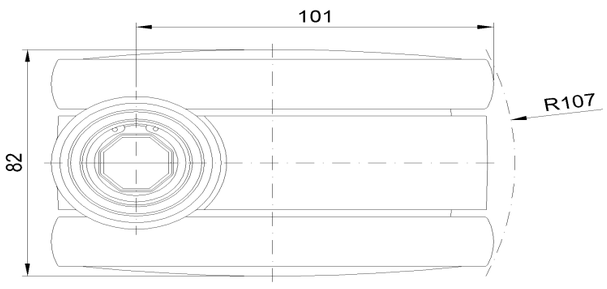

* For any deviation between metric and imperial spec, please refer to the metric spec.

© Copyright 2026 DershengInternational www.dersheng.com