1152 Anti-Friction Caster (B Type) Series

PU (red round) Wheel Diameter x Wheel Width 125 x 40mm

EAN

KS-11520500334331

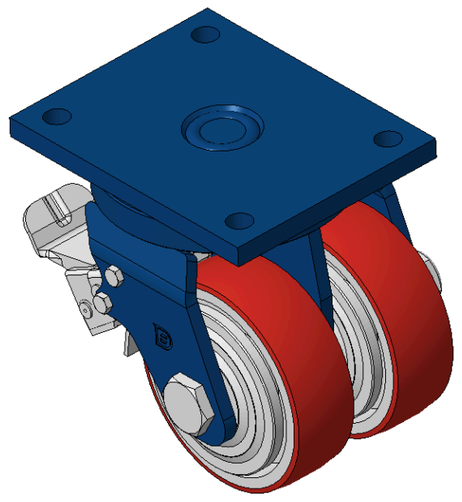

Picture may differ from original product

Drawings are for reference only and may differ from the product

Technical Data

◉ Metric ○ Imperial

Wheel Diameter	125mm
Wheel Width	40mm
Wheel Bearing	Wheels With Ball Bearings
Plate Size	175 x 140mm
Bolt Hole Spacing	140x105mm
Plate Hole	15mm
Offset	50mm
Swivel Interference	250mm
Overall Height	175mm
Swivel Radius	125mm
Hardness Of Tread	93±5° Shore A
Load Capacity (Dynamic)	340kgs
Load Capacity (Static)	510kgs
Temperature	-20°C to +70°C
Fork Type	Swivel Caster With Rear Brake
Stainless	N/A
Electrical Conductivity	N/A
Anti-Static	N/A
Weight	9.45kgs
Standard	ISO22883

Advantages at a glance

Rolling Resistance	●●●○○
Operating Noise	●●●●○
Floor Surface Preservation	●●●●○

Dimensions

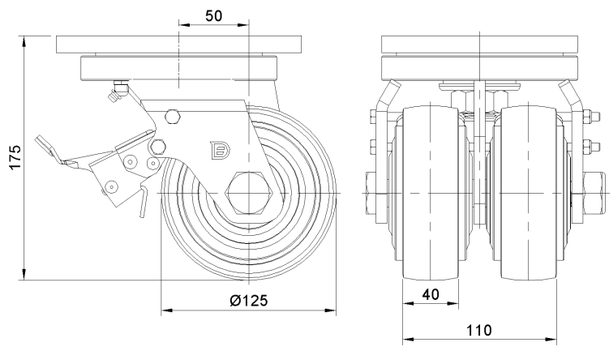

Mounting

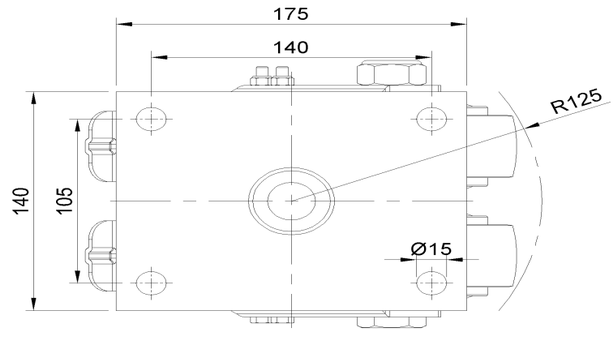

* For any deviation between metric and imperial spec, please refer to the metric spec.

© Copyright 2026 DershengInternational www.dersheng.com