1152 Self-Align Casters Series

VXPU (burgundy round) Wheel Diameter x Wheel Width 150 x 42mm

EAN

KS-11520600694741

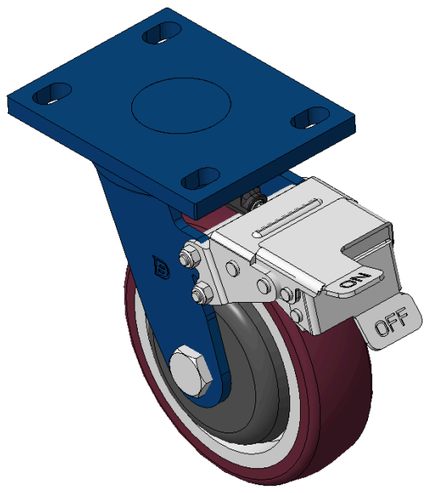

Picture may differ from original product

Drawings are for reference only and may differ from the product

Technical Data

◉ Imperial ○ Metric

Wheel Diameter	6 "
Wheel Width	1-11/16 "
Wheel Bearing	Wheels With Ball Bearings
Plate Size	5-9/16 " x 4-3/8 "
Bolt Hole Spacing	4-5/16 " x3”
Plate Hole	7/8 " x 9/16 "
Offset	1-11/16 "
Swivel Interference	12-11/16 "
Overall Height	7-7/8 "
Swivel Radius	6-3/8 "
Hardness Of Tread	94±5° Shore A
Load Capacity (Dynamic)	1764lbs
Load Capacity (Static)	2646lbs
Temperature	-4°F to +176°F
Fork Type	Swivel Caster With Front Brake
Stainless	N/A
Electrical Conductivity	N/A
Anti-Static	N/A
Weight	12.9lbs
Standard	ISO22883

Advantages at a glance

Rolling Resistance	●●●●○
Operating Noise	●●●●○
Floor Surface Preservation	●●●●●

Dimensions

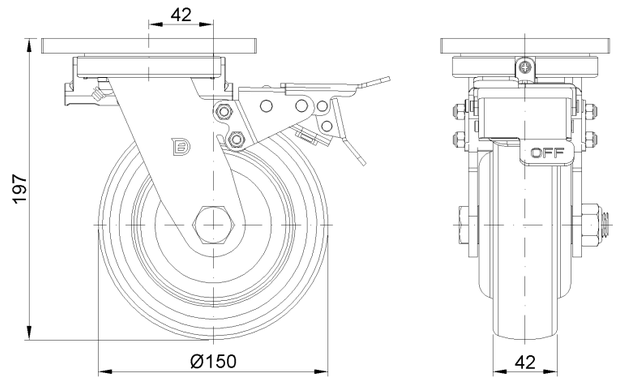

Mounting

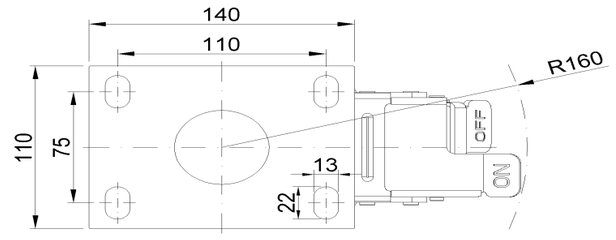

* For any deviation between metric and imperial spec, please refer to the metric spec.

© Copyright 2026 DershengInternational www.dersheng.com