# 1152 Anti-Friction Caster (B Type) Series

PU (red flat) Wheel Diameter x Wheel Width 200 x 50mm

EAN

KS-11520800332351

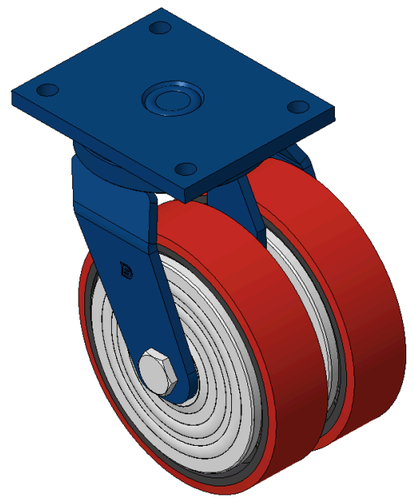

Picture may differ from original product

Drawings are for reference only and may differ from the product

## Technical Data

◉ Metric ○ Imperial

| | |
|---|---|
| Wheel Diameter | 200mm |
| Wheel Width | 50mm |
| Wheel Bearing | Wheels With Ball Bearings |
| Plate Size | 175 x 140mm |
| Bolt Hole Spacing | 140x105mm |
| Plate Hole | 15mm |
| Offset | 60mm |
| Swivel Interference | 346mm |
| Overall Height | 260mm |
| Swivel Radius | 173mm |
| Hardness Of Tread | 93±5° Shore A |
| Load Capacity (Dynamic) | 810kgs |
| Load Capacity (Static) | 1215kgs |
| Temperature | -20°C to +70°C |
| Fork Type | Swivel Caster |
| Stainless | N/A |
| Electrical Conductivity | N/A |
| Anti-Static | N/A |
| Weight | 12.72kgs |
| Standard | ISO22883 |

## Advantages at a glance

| | |
|---|---|
| Rolling Resistance | ●●●○○ |
| Operating Noise | ●●●●○ |
| Floor Surface Preservation | ●●●●○ |

## Dimensions

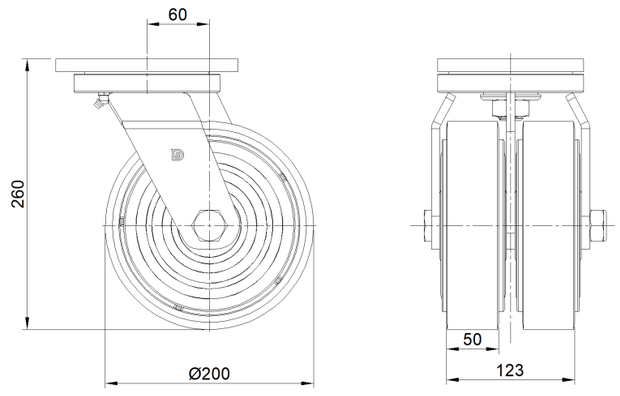


## Mounting

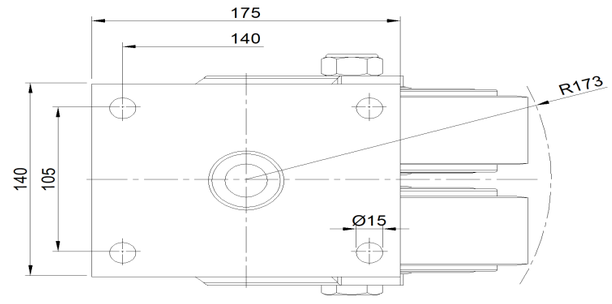


* For any deviation between metric and imperial spec, please refer to the metric spec.

© Copyright 2026 DershengInternational www.dersheng.com