1152 Anti-Friction Caster (B Type) Series

PU (red flat) Wheel Diameter x Wheel Width 200 x 50mm

EAN

KS-11520800334351

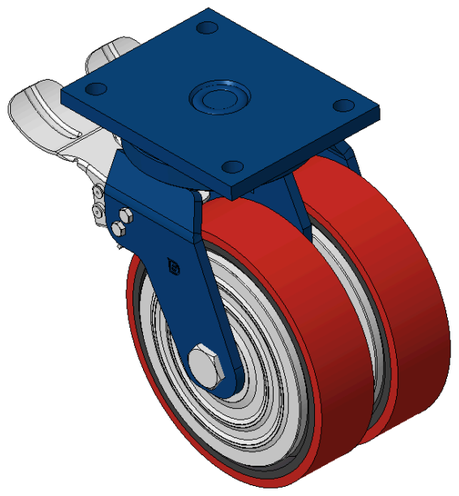

Picture may differ from original product

Drawings are for reference only and may differ from the product

Technical Data

◉ Imperial ○ Metric

Wheel Diameter	8 "
Wheel Width	2 "
Wheel Bearing	Wheels With Ball Bearings
Plate Size	7 " x 5-9/16 "
Bolt Hole Spacing	5-1/2 “x4-1/8”
Plate Hole	5/8 "
Offset	2-7/16 "
Swivel Interference	13-5/8 "
Overall Height	10-3/8 "
Swivel Radius	6-7/8 "
Hardness Of Tread	93±5° Shore A
Load Capacity (Dynamic)	1786lbs
Load Capacity (Static)	2679lbs
Temperature	-4°F to +158°F
Fork Type	Swivel Caster With Rear Brake
Stainless	N/A
Electrical Conductivity	N/A
Anti-Static	N/A
Weight	23.8lbs
Standard	ISO22883

Advantages at a glance

Rolling Resistance	●●●○○
Operating Noise	●●●●○
Floor Surface Preservation	●●●●○

Dimensions

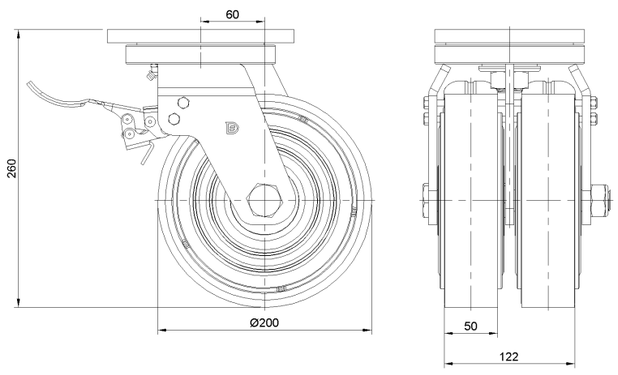

Mounting

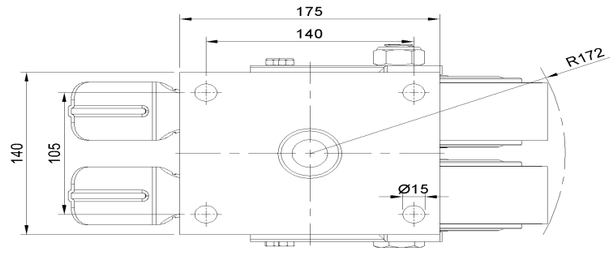

* For any deviation between metric and imperial spec, please refer to the metric spec.

© Copyright 2026 DershengInternational www.dersheng.com