# 1152 Anti-Friction Caster (B Type) Series

## QPU (Brown Flat) Wheel Diameter x Wheel Width 200 x 50mm

EAN

KS-11520800534351

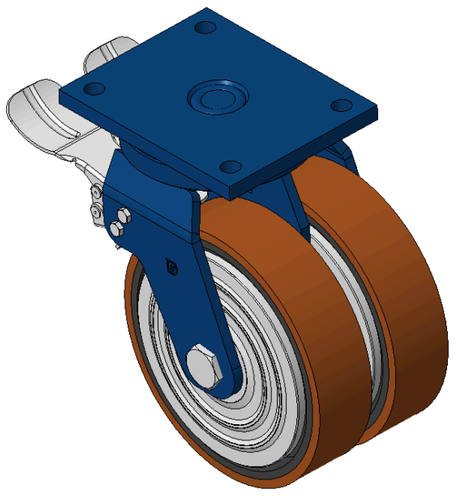

Picture may differ from original product

Drawings are for reference only and may differ from the product

### Technical Data

◉ Imperial ○ Metric

| | |
|---|---|
| Wheel Diameter | 8 " |
| Wheel Width | 2 " |
| Wheel Bearing | Wheels With Ball Bearings |
| Plate Size | 7 " x 5-9/16 " |
| Bolt Hole Spacing | 5-1/2 “x4-1/8” |
| Plate Hole | 5/8 " |
| Offset | 2-7/16 " |
| Swivel Interference | 13-5/8 " |
| Overall Height | 10-3/8 " |
| Swivel Radius | 6-7/8 " |
| Hardness Of Tread | 92±5° Shore A |
| Load Capacity (Dynamic) | 2857lbs |
| Load Capacity (Static) | 4286lbs |
| Temperature | -4°F to +158°F |
| Fork Type | Swivel Caster With Rear Brake |
| Stainless | N/A |
| Electrical Conductivity | N/A |
| Anti-Static | N/A |
| Weight | 30.0lbs |
| Standard | ISO22883 |

### Advantages at a glance

| | |
|---|---|
| Rolling Resistance | ●●●●● |
| Operating Noise | ●●●●● |
| Floor Surface Preservation | ●●●●● |

### Dimensions

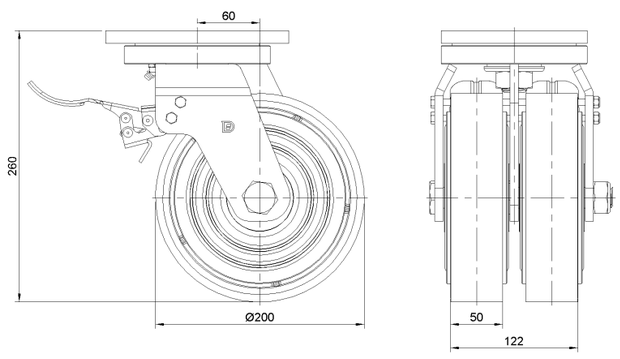


### Mounting

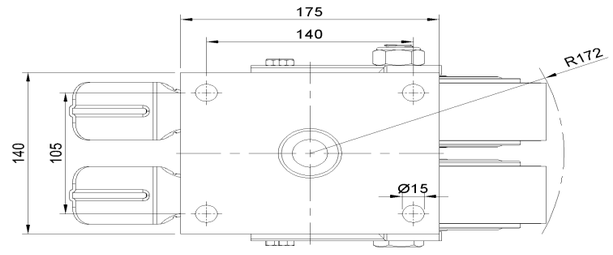


* For any deviation between metric and imperial spec, please refer to the metric spec.

© Copyright 2026 DershengInternational www.dersheng.com