1152 Anti-Friction Caster Series

MRC Wheel (Transparent) Wheel Diameter×Wheel Width 250×50mm

EAN

KS-11521000074121

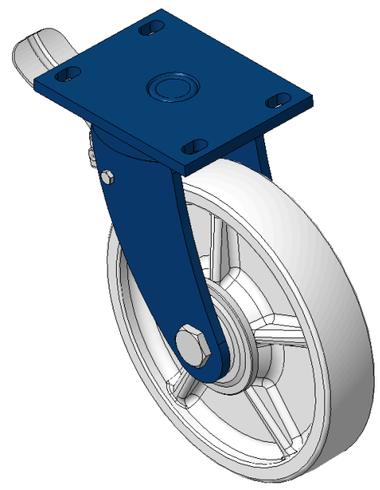

Picture may differ from original product

Drawings are for reference only and may differ from the product

Technical Data

◉ Metric ○ Imperial

Wheel Diameter	250mm
Wheel Width	50mm
Wheel Bearing	Wheels With Ball Bearings
Plate Size	167 x 130mm
Bolt Hole Spacing	140x85mm
Plate Hole	22 x 13mm
Offset	63mm
Swivel Interference	386mm
Overall Height	305mm
Swivel Radius	193mm
Hardness Of Tread	75±5° Shore D
Load Capacity (Dynamic)	800kgs
Load Capacity (Static)	1200kgs
Temperature	-20°C to +80°C
Fork Type	Swivel Caster With Rear Brake
Stainless	N/A
Electrical Conductivity	N/A
Anti-Static	N/A
Weight	8.60kgs
Standard	ISO22883

Advantages at a glance

Rolling Resistance	●●●●●
Operating Noise	●●○○○
Floor Surface Preservation	●●○○○

Dimensions

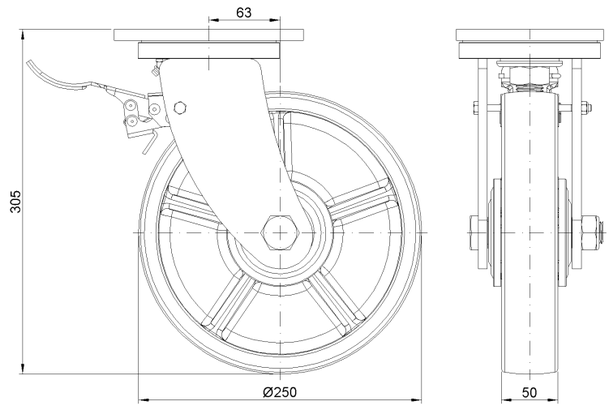

Mounting

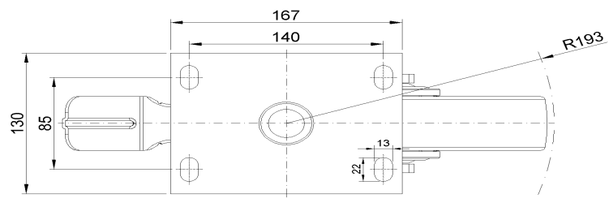

* For any deviation between metric and imperial spec, please refer to the metric spec.

© Copyright 2026 DershengInternational www.dersheng.com