1152 Anti-Friction Caster Series

MRC Wheel (Transparent) Wheel Diameter×Wheel Width 250×50mm

EAN

KS-11521000074121

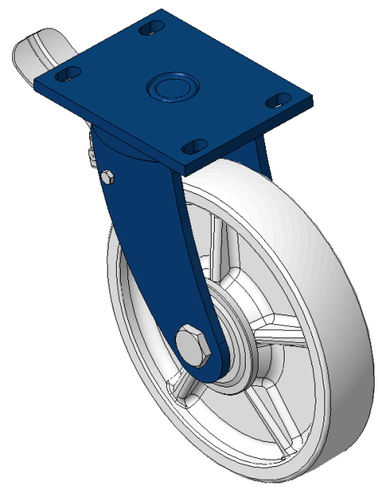

Picture may differ from original product

Drawings are for reference only and may differ from the product

Technical Data

◉ Imperial ○ Metric

Wheel Diameter	10 "
Wheel Width	2 "
Wheel Bearing	Wheels With Ball Bearings
Plate Size	6-5/8 " x 5-3/16 "
Bolt Hole Spacing	5-1/2 " x3-3/8 "
Plate Hole	7/8 " x 9/16 "
Offset	2-1/2 "
Swivel Interference	15-1/4 "
Overall Height	12-1/16 "
Swivel Radius	7-11/16 "
Hardness Of Tread	75±5° Shore D
Load Capacity (Dynamic)	1764lbs
Load Capacity (Static)	2646lbs
Temperature	-4°F to +176°F
Fork Type	Swivel Caster With Rear Brake
Stainless	N/A
Electrical Conductivity	N/A
Anti-Static	N/A
Weight	19.0lbs
Standard	ISO22883

Advantages at a glance

Rolling Resistance	●●●●●
Operating Noise	●●○○○
Floor Surface Preservation	●●○○○

Dimensions

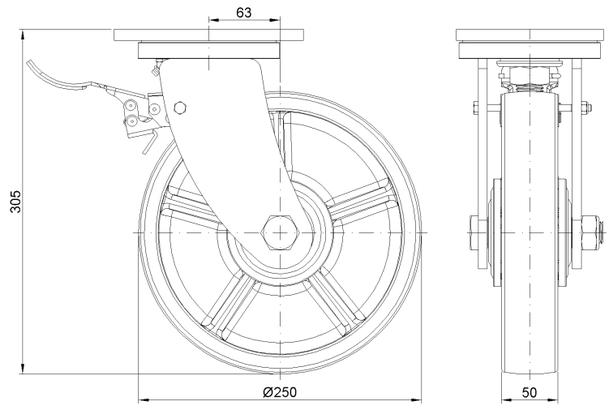

Mounting

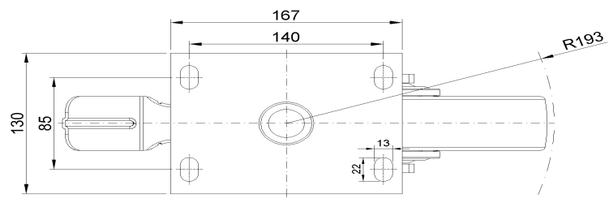

* For any deviation between metric and imperial spec, please refer to the metric spec.

© Copyright 2026 DershengInternational www.dersheng.com