1152 Anti-Friction Caster Series

PU (red flat) Wheel Diameter x Wheel Width 254x 62mm

EAN

KS-11521000332011

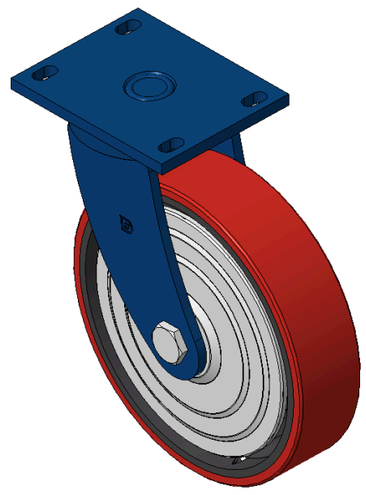

Picture may differ from original product

Drawings are for reference only and may differ from the product

Technical Data

◉ Imperial ○ Metric

Wheel Diameter	10-1/16 "
Wheel Width	2-1/2 "
Wheel Bearing	Wheels With Ball Bearings
Plate Size	6-5/8 " x 5-3/16 "
Bolt Hole Spacing	5-1/2 " x3-3/8 "
Plate Hole	7/8 " x 9/16 "
Offset	2-1/2 "
Swivel Interference	15-1/4 "
Overall Height	12-3/16 "
Swivel Radius	7-11/16 "
Hardness Of Tread	93±5° Shore A
Load Capacity (Dynamic)	1323lbs
Load Capacity (Static)	1984lbs
Temperature	-4°F to +158°F
Fork Type	Swivel Caster
Stainless	N/A
Electrical Conductivity	N/A
Anti-Static	N/A
Weight	26.5lbs
Standard	ISO22883

Advantages at a glance

Rolling Resistance	●●●○○
Operating Noise	●●●●○
Floor Surface Preservation	●●●●○

Dimensions

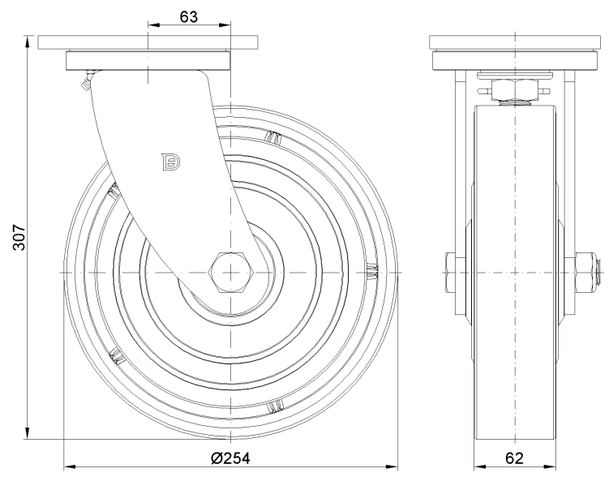

Mounting

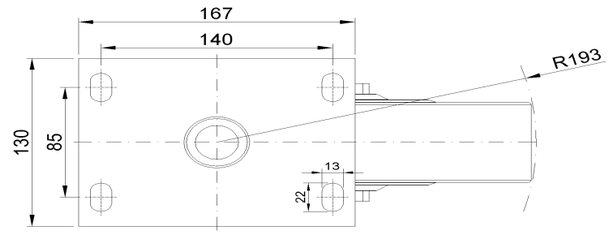

* For any deviation between metric and imperial spec, please refer to the metric spec.

© Copyright 2026 DershengInternational www.dersheng.com