Product Data Sheet

1155 STAT Series Caster Series (All Plastic)

DERSHENG
Dersheng Casters Keep Rolling

Resolute (blue gray) Wheel Diameter x Wheel Width 75 x 27mm

EAN

KS-11550300455173

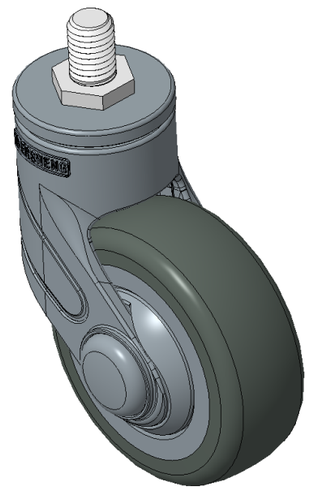

Picture may differ from original product

Swivel Casters, Threaded Stem installation—M12x17
Blue-grey polyamide legs, Mounting Type - Threaded Stem
High-Quality Impact-Resistant Polypropylene Wheel Center, High-Quality Reinforced Polypropylene Rubber (TPR) Wheel Tread
Dark gray, Bearing—Ball Bearings

Wheel tread: Thermoplastic rubber elastomer (TPR)

Wheel Center: Made of high-quality impact-resistant polypropylene

Drawings are for reference only and may differ from the product

Technical Data

◉ Metric ○ Imperial

Wheel Diameter	75mm
Wheel Width	27mm
Wheel Bearing	Wheels With Ball Bearings
Threaded Stem	M12
Threaded Length	17mm
Offset	27mm
Swivel Interference	130mm
Overall Height	107mm
Swivel Radius	65mm
Hardness Of Tread	72±5° Shore A
Load Capacity (Dynamic)	75kgs
Load Capacity (Static)	112.5kgs
Temperature	-20°C to +60°C
Fork Type	Swivel Caster
Stainless	N/A
Electrical Conductivity	N/A
Anti-Static	N/A
Weight	0.26kgs
Standard	ISO22881

Advantages at a glance

Rolling Resistance	● ● ● ● ●
Operating Noise	● ● ● ● ●
Floor Surface Preservation	● ● ● ● ●

Dimensions

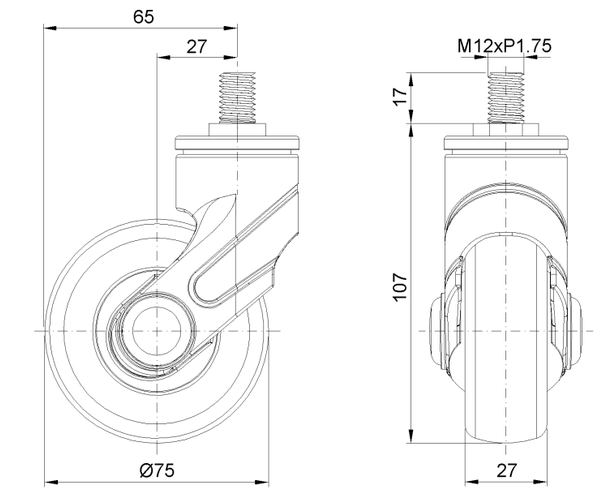

Mounting

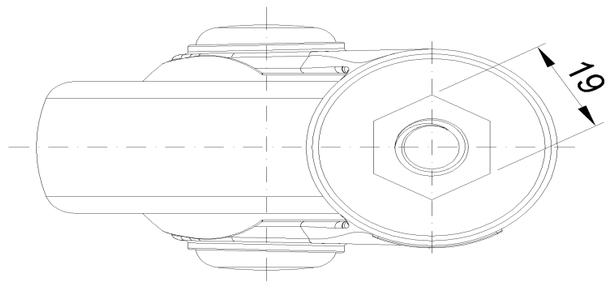

* For any deviation between metric and imperial spec, please refer to the metric spec.

© Copyright 2025 DershengInternational www.dersheng.com