1155-2 Light Plastic-2 Series

PPR Wheel Diameter × Wheel Width 75 x 25 mm

EAN

KS-11550303262133

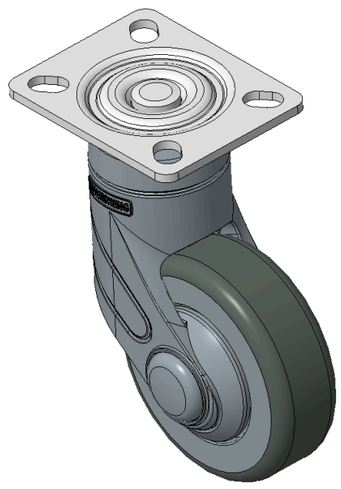

Picture may differ from original product

Drawings are for reference only and may differ from the product

Technical Data

◉ Imperial ○ Metric

Wheel Diameter	75mm
Wheel Width	25mm
Wheel Bearing	Wheel With Plain Bearing
Plate Size	73 x 59mm
Bolt Hole Spacing	53x39.25mm
Plate Hole	12.5 x 8.5mm
Offset	27mm
Swivel Interference	130mm
Overall Height	121.5mm
Swivel Radius	65mm
Hardness Of Tread	82±5° Shore A
Load Capacity (Dynamic)	50kgs
Load Capacity (Static)	75kgs
Temperature	-20°C to +60°C
Fork Type	Swivel Caster
Stainless	N/A
Electrical Conductivity	N/A
Anti-Static	N/A
Weight	0.32kgs
Standard	ISO22881

Advantages at a glance

Rolling Resistance	●●●●○
Operating Noise	●●●●○
Floor Surface Preservation	●●●●●

Dimensions

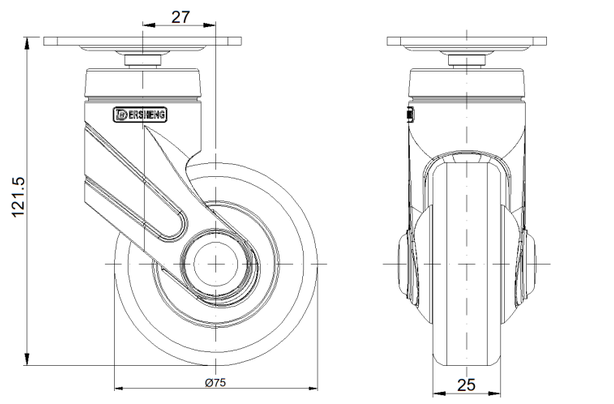

Mounting

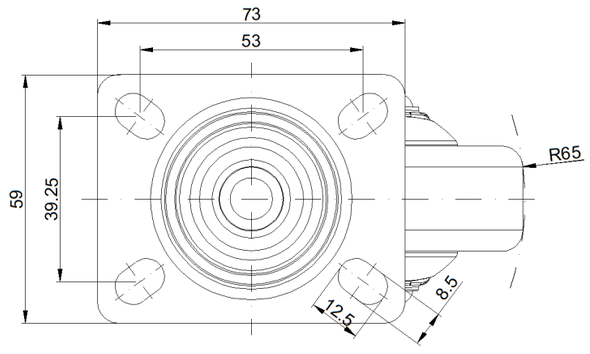

* For any deviation between metric and imperial spec, please refer to the metric spec.

© Copyright 2026 DershengInternational www.dersheng.com