1155-2 Light Plastic-2 Series

PPR Wheel (Gray Dark Gray Flat) Wheel Diameter × Wheel Width 75×25mm

EAN

KS-11550303264213

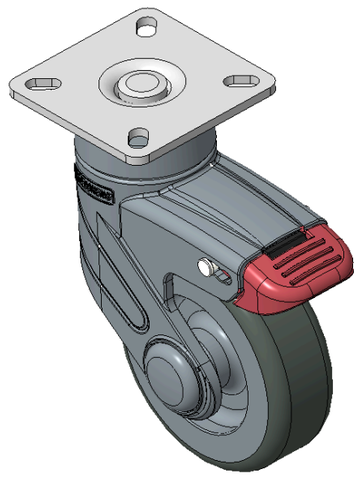

Picture may differ from original product

Drawings are for reference only and may differ from the product

Technical Data

◉ Imperial ○ Metric

Wheel Diameter	75mm
Wheel Width	25mm
Wheel Bearing	Wheel With Plain Bearing
Plate Size	60 x 60mm
Bolt Hole Spacing	42.5×42.5mm
Plate Hole	10.9 x 6mm
Offset	32mm
Swivel Interference	164mm
Overall Height	120mm
Swivel Radius	82mm
Hardness Of Tread	82±5° Shore A
Load Capacity (Dynamic)	50kgs
Load Capacity (Static)	75kgs
Temperature	-20°C to +60°C
Fork Type	Swivel Caster
Stainless	N/A
Electrical Conductivity	N/A
Anti-Static	N/A
Weight	0.32kgs
Standard	ISO22881

Advantages at a glance

Rolling Resistance	●●●●○
Operating Noise	●●●●○
Floor Surface Preservation	●●●●●

Dimensions

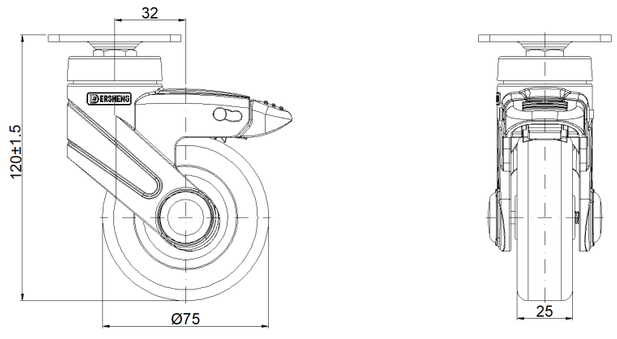

Mounting

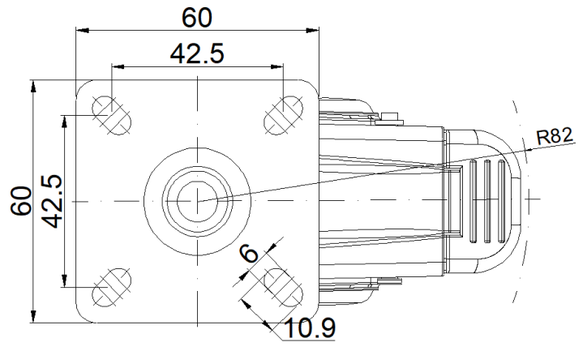

* For any deviation between metric and imperial spec, please refer to the metric spec.

© Copyright 2026 DershengInternational www.dersheng.com