# 1155-1 Light Plastic-1 Series

PPR Wheel (Black-Black Flat) Wheel Diameter × Wheel Width 75 x 25mm

A

KS-11550391265013

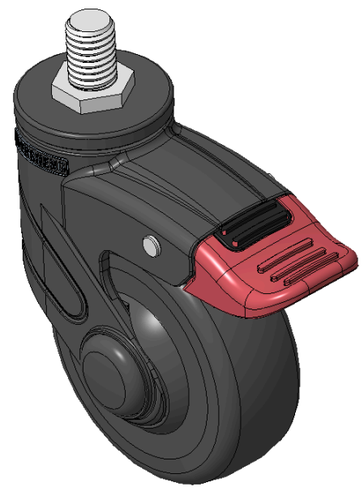

Picture may differ from original product

Drawings are for reference only and may differ from the product

## Technical Data

◉ Metric ○ Imperial

| | |
|---|---|
| Wheel Diameter | 75mm |
| Wheel Width | 25mm |
| Wheel Bearing | Wheel With Plain Bearing |
| Threaded Stem | |
| Threaded Length | 25mm |
| Offset | 27mm |
| Swivel Interference | 87.5mm |
| Overall Height | 107mm |
| Swivel Radius | 50mm |
| Hardness Of Tread | 72±5° Shore A |
| Load Capacity (Dynamic) | 75kgs |
| Load Capacity (Static) | 112.5kgs |
| Temperature | -20°C to +60°C |
| Fork Type | Swivel Caster |
| Stainless | N/A |
| Electrical Conductivity | N/A |
| Anti-Static | N/A |
| Weight | 0.26kgs |
| Standard | ISO22883 |

## Advantages at a glance

| | |
|---|---|
| Rolling Resistance | ●●●●● |
| Operating Noise | ●●●●● |
| Floor Surface Preservation | ●●●●● |

## Dimensions

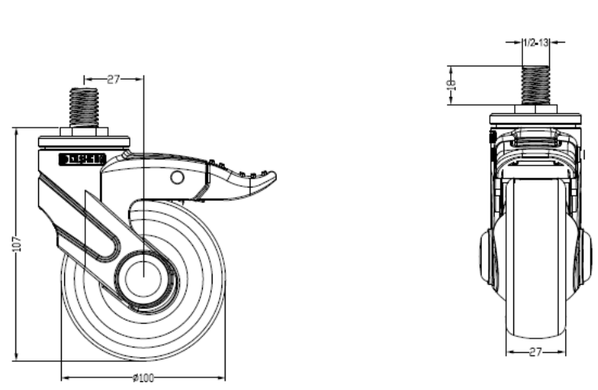


## Mounting

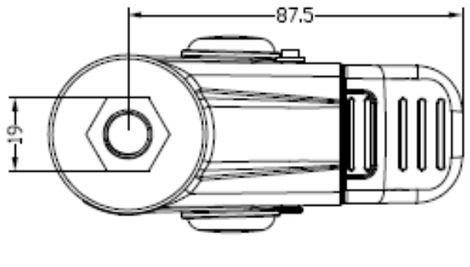


* For any deviation between metric and imperial spec, please refer to the metric spec.

© Copyright 2026 DershengInternational www.dersheng.com