# 1155 STAT Series Caster Series (All Plastic)

Classic PPR Wheel (Middle Tube Pearlescent Dark Gray) Wheel Diameter×Wheel Width 100×24mm

EAN

KS-11550402266163

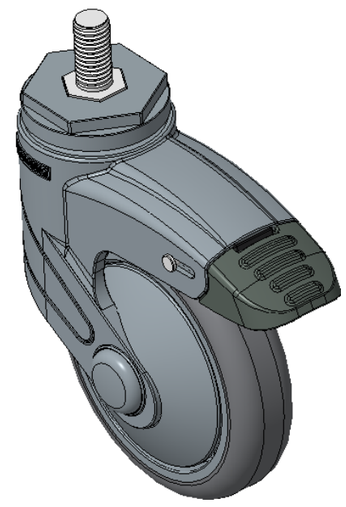

Picture may differ from original product

Drawings are for reference only and may differ from the product

## Technical Data

◉ Imperial ○ Metric

| | |
|---|---|
| Wheel Diameter | 4 " |
| Wheel Width | 1 " |
| Wheel Bearing | Wheel With Plain Bearing |
| Threaded Stem | M12 |
| Threaded Length | 1 " |
| Offset | 1-7/16 " |
| Swivel Interference | 9 " |
| Overall Height | 5-1/2 " |
| Swivel Radius | 4-1/2 " |
| Hardness Of Tread | 85±5° Shore A |
| Load Capacity (Dynamic) | 132lbs |
| Load Capacity (Static) | 198lbs |
| Temperature | -4°F to +176°F |
| Fork Type | Swivel Caster With Total Brake |
| Stainless | N/A |
| Electrical Conductivity | N/A |
| Anti-Static | N/A |
| Weight | 1.5lbs |
| Standard | ISO22881 |

## Advantages at a glance

| | |
|---|---|
| Rolling Resistance | ●●●●● |
| Operating Noise | ●●●●● |
| Floor Surface Preservation | ●●●●● |

## Dimensions

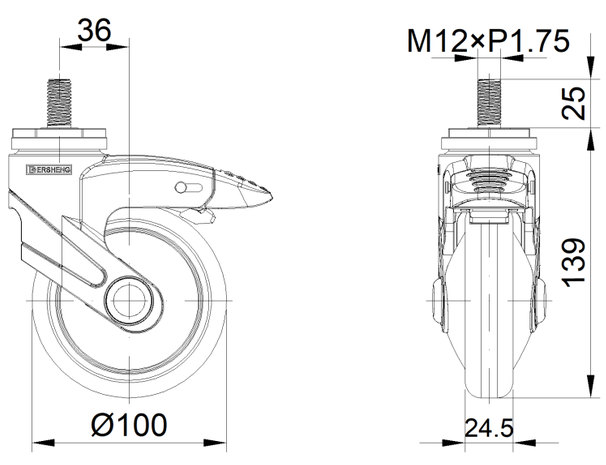


## Mounting

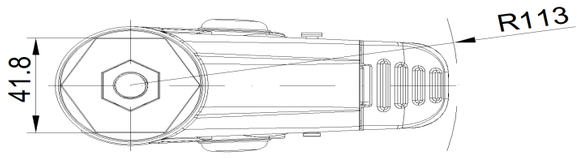


* For any deviation between metric and imperial spec, please refer to the metric spec.

© Copyright 2026 DershengInternational www.dersheng.com