1155-2 Light Plastic-2 Series

PPR (Pearlescent dark gray) Wheel Diameter × Wheel Width 100 x 31mm

EAN

KS-11550403262033

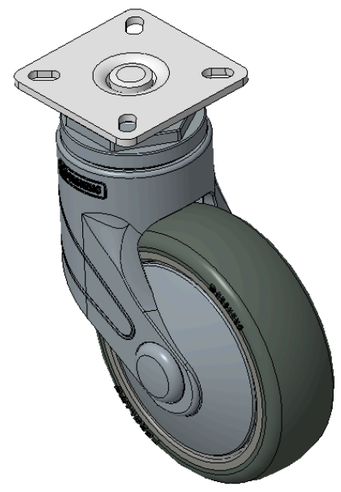

Picture may differ from original product

Drawings are for reference only and may differ from the product

Technical Data

◉ Imperial ○ Metric

Wheel Diameter	4 "
Wheel Width	1-9/16 "
Wheel Bearing	Wheels With Ball Bearings
Plate Size	2-7/16 " x 2-7/16 "
Bolt Hole Spacing	1-11/16 “x1-11/16”
Plate Hole	3/8 " x 1/4 "
Offset	1-7/16 "
Swivel Interference	7 "
Overall Height	5-13/16 "
Swivel Radius	3-1/2 "
Hardness Of Tread	82±5° Shore A
Load Capacity (Dynamic)	110lbs
Load Capacity (Static)	165lbs
Temperature	-4°F to +140°F
Fork Type	Swivel Caster
Stainless	N/A
Electrical Conductivity	N/A
Anti-Static	N/A
Weight	0.9lbs
Standard	ISO22881

Advantages at a glance

Rolling Resistance	●●●●○
Operating Noise	●●●●○
Floor Surface Preservation	●●●●●

Dimensions

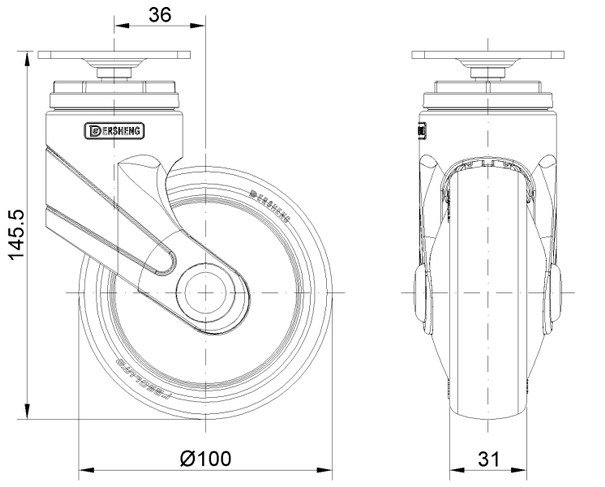

Mounting

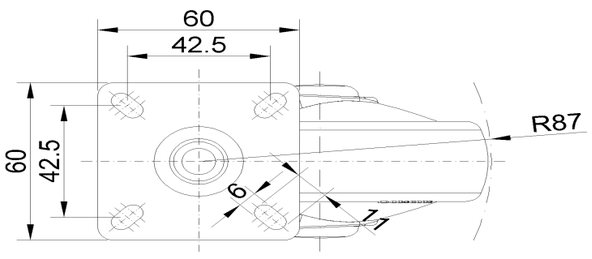

* For any deviation between metric and imperial spec, please refer to the metric spec.

© Copyright 2026 DershengInternational www.dersheng.com