1155-2 Light Plastic-2 Series

PPR (Pearlescent dark gray) Wheel Diameter × Wheel Width 100 x 31mm

EAN

KS-11550403262233

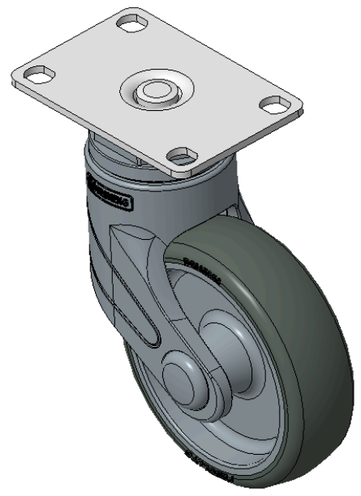

Picture may differ from original product

Drawings are for reference only and may differ from the product

Technical Data

◉ Metric ○ Imperial

Wheel Diameter	100mm
Wheel Width	31mm
Wheel Bearing	Wheel With Plain Bearing
Plate Size	92 x 62mm
Bolt Hole Spacing	75 x 45mm
Plate Hole	11.1 x 9.6mm
Offset	36mm
Swivel Interference	174mm
Overall Height	145.5mm
Swivel Radius	87mm
Hardness Of Tread	82±5° Shore A
Load Capacity (Dynamic)	50kgs
Load Capacity (Static)	75kgs
Temperature	-20°C to +60°C
Fork Type	Swivel Caster
Stainless	N/A
Electrical Conductivity	N/A
Anti-Static	N/A
Weight	0.48kgs
Standard	ISO22881

Advantages at a glance

Rolling Resistance	●●●●○
Operating Noise	●●●●○
Floor Surface Preservation	●●●●●

Dimensions

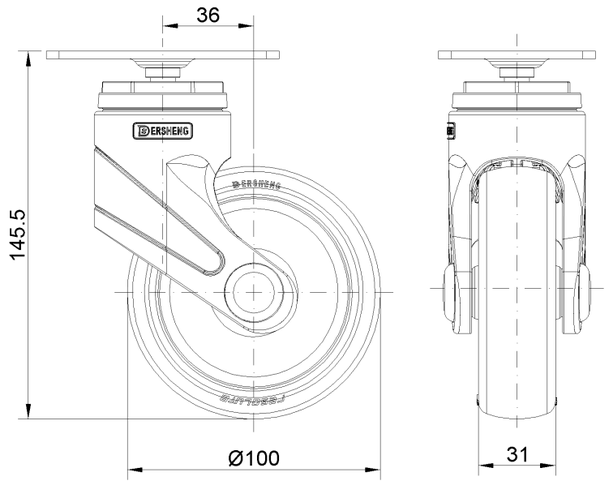

Mounting

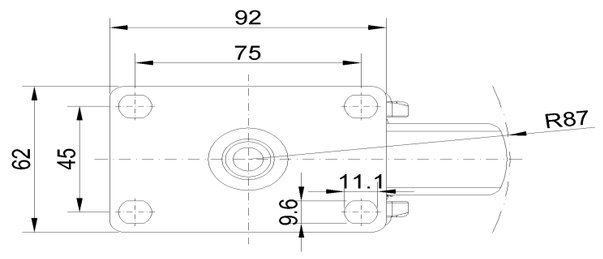

* For any deviation between metric and imperial spec, please refer to the metric spec.

© Copyright 2026 DershengInternational www.dersheng.com