# 1155-2 Light Plastic-2 Series

PPR (Pearlescent dark gray) Wheel Diameter × Wheel Width 100 x 31mm

EAN

KS-11550403267143

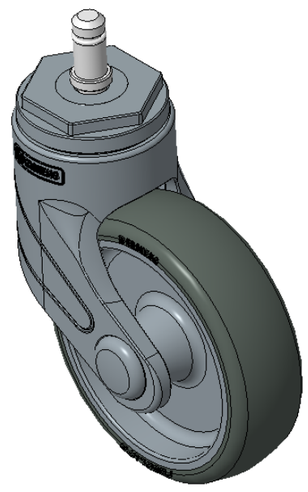

Picture may differ from original product

Drawings are for reference only and may differ from the product

## Technical Data

◉ Imperial ○ Metric

| | |
|---|---|
| Wheel Diameter | 4 " |
| Wheel Width | 1-1/4 " |
| Wheel Bearing | Wheel With Plain Bearing |
| Stem Diameter | 3/8 " |
| Stem Length | 7/8 " |
| Offset | 1-7/16 " |
| Swivel Interference | 7 " |
| Overall Height | 5-1/2 " |
| Swivel Radius | 3-1/2 " |
| Hardness Of Tread | 82±5° Shore A |
| Load Capacity (Dynamic) | 110lbs |
| Load Capacity (Static) | 165lbs |
| Temperature | -4°F to +140°F |
| Fork Type | Swivel Caster |
| Stainless | N/A |
| Electrical Conductivity | N/A |
| Anti-Static | N/A |
| Weight | 0.6lbs |
| Standard | ISO22881 |

## Advantages at a glance

| | |
|---|---|
| Rolling Resistance | ●●●●○ |
| Operating Noise | ●●●●○ |
| Floor Surface Preservation | ●●●●● |

## Dimensions

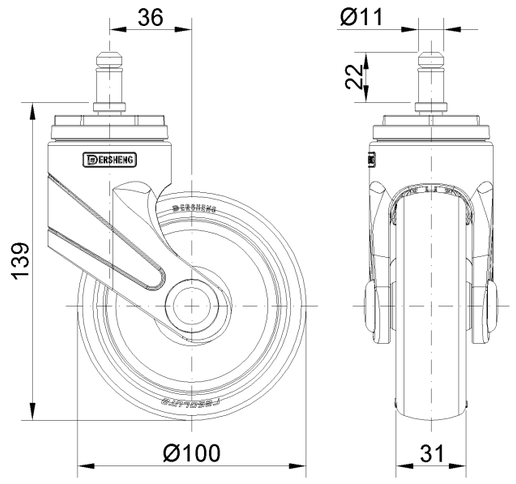


## Mounting

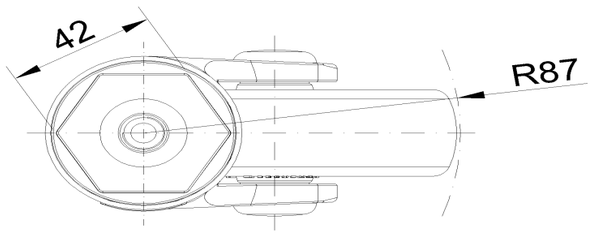


* For any deviation between metric and imperial spec, please refer to the metric spec.

© Copyright 2026 DershengInternational www.dersheng.com