1155-2 Light Plastic-2 Series

PPR (Pearlescent dark gray) Wheel Diameter × Wheel Width 100 x 31mm

EAN

KS-11550403268133

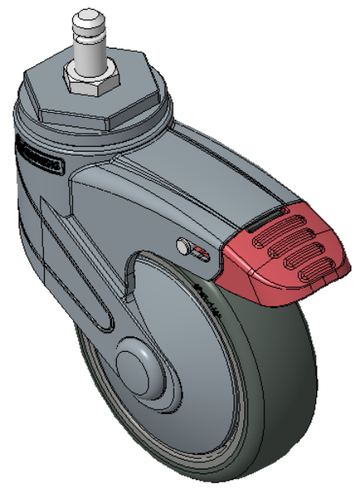

Picture may differ from original product

Drawings are for reference only and may differ from the product

Technical Data

◉ Metric ○ Imperial

Wheel Diameter	100mm
Wheel Width	31mm
Wheel Bearing	Wheel With Plain Bearing
Stem Diameter	11mm
Stem Length	22mm
Offset	46mm
Swivel Interference	232mm
Overall Height	139mm
Swivel Radius	116mm
Hardness Of Tread	82±5° Shore A
Load Capacity (Dynamic)	50kgs
Load Capacity (Static)	75kgs
Temperature	-20°C to +60°C
Fork Type	Swivel Caster With Total Brake
Stainless	N/A
Electrical Conductivity	N/A
Anti-Static	N/A
Weight	0.40kgs
Standard	ISO22881

Advantages at a glance

Rolling Resistance	●●●●○
Operating Noise	●●●●○
Floor Surface Preservation	●●●●●

Dimensions

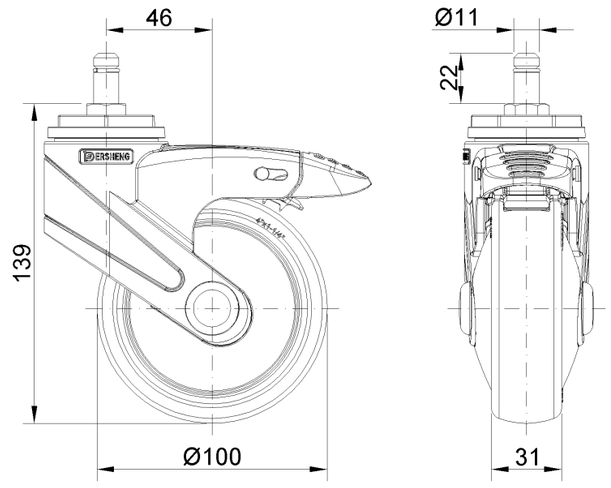

Mounting

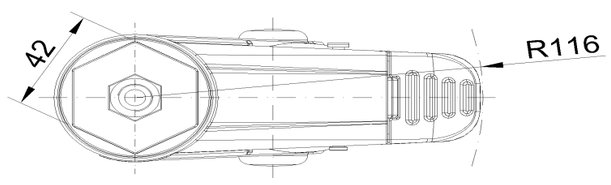

* For any deviation between metric and imperial spec, please refer to the metric spec.

© Copyright 2026 DershengInternational www.dersheng.com