Product Data Sheet

1155 STAT Series Caster Series (All Plastic)

Resolute (Middle Tube Blue-Gray Dark Gray) Wheel Diameter×Wheel Width
125×31mm

EAN

KS-11550500456393

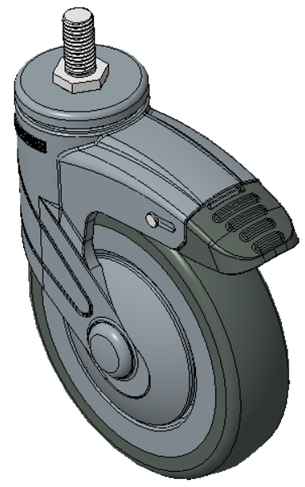

Picture may differ from original product

All-purpose wheels
Equipped with long Total Brakes, With locking system Casters, Threaded Stem M12x25
Blue-gray legs made of polyamide reinforced material
Rust-proof, Corrosion resistant, Attractive appearance, Economical, and Smooth rotation
High-Quality Impact-Resistant Polypropylene Wheel Center, High-Quality Reinforced Polypropylene Rubber (TPR) Wheel Tread
Dark gray, Plain Bearings

Wheel tread: Thermoplastic rubber elastomer (TPR)

Wheel Center: Made of high-quality impact-resistant polypropylene

Drawings are for reference only and may differ from the product

Technical Data

◉ Metric ○ Imperial

Wheel Diameter	125mm
Wheel Width	31.5mm
Wheel Bearing	Wheel With Plain Bearing
Threaded Stem	M12
Threaded Length	25mm
Offset	38mm
Swivel Interference	226mm
Overall Height	164mm
Swivel Radius	113mm
Hardness Of Tread	72±5° Shore A
Load Capacity (Dynamic)	100kgs
Load Capacity (Static)	150kgs
Temperature	-20°C to +60°C
Fork Type	Swivel Caster With Total Brake
Stainless	N/A
Electrical Conductivity	N/A
Anti-Static	N/A
Weight	0.87kgs
Standard	ISO22883

Advantages at a glance

Rolling Resistance	● ● ● ● ●
Operating Noise	● ● ● ● ●
Floor Surface Preservation	● ● ● ● ●

Dimensions

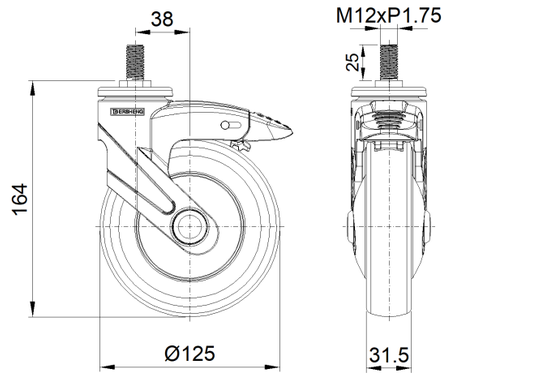

Mounting

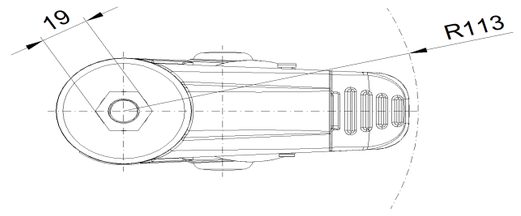

* For any deviation between metric and imperial spec, please refer to the metric spec.

© Copyright 2026 DershengInternational www.dersheng.com