# 1155 STAT Series Caster Series (All Plastic)

Classic PPR Wheel (Pearlescent Dark Gray) Wheel Diameter×Wheel Width 125×24.5mm

EAN

KS-11550502264043

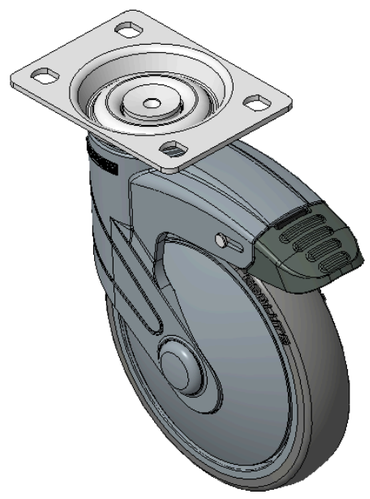

Drawings are for reference only and may differ from the product

Picture may differ from original product

## Technical Data

◉ Metric ○ Imperial

| | |
|---|---|
| Wheel Diameter | 125mm |
| Wheel Width | 24.5mm |
| Wheel Bearing | Wheels With Ball Bearings |
| Plate Size | 96 x 69mm |
| Bolt Hole Spacing | 75 x 45mm |
| Plate Hole | 11 x 8.6mm |
| Offset | 38mm |
| Swivel Interference | 226mm |
| Overall Height | 165.5mm |
| Swivel Radius | 113mm |
| Hardness Of Tread | 82±5° Shore A |
| Load Capacity (Dynamic) | 80kgs |
| Load Capacity (Static) | 120kgs |
| Temperature | -20°C to +60°C |
| Fork Type | Swivel Caster With Total Brake |
| Stainless | N/A |
| Electrical Conductivity | N/A |
| Anti-Static | N/A |
| Weight | 0.84kgs |
| Standard | ISO22881 |

## Advantages at a glance

| | |
|---|---|
| Rolling Resistance | ● ● ● ● ○ |
| Operating Noise | ● ● ● ● ○ |
| Floor Surface Preservation | ● ● ● ● ● |

## Dimensions

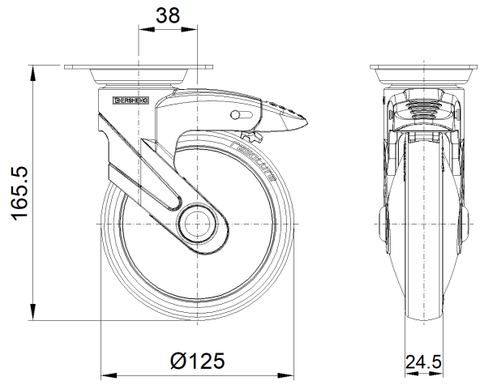


## Mounting

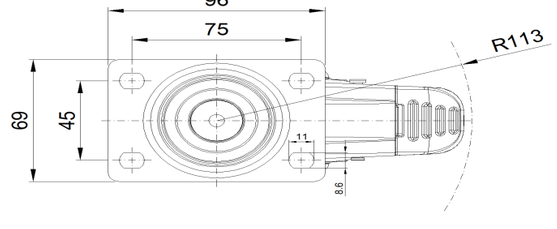


* For any deviation between metric and imperial spec, please refer to the metric spec.

© Copyright 2026 DershengInternational www.dersheng.com