# 1155 STAT Series Caster Series (All Plastic)

Classic PPR Wheel (Middle Tube Blue Gray/Dark Gray) Wheel Diameter×Wheel Width 125×24.5mm

EAN

KS-11550502264183

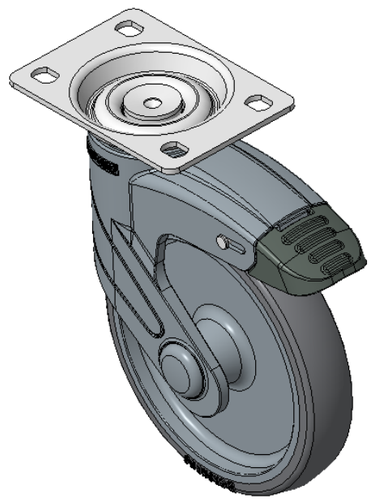

Picture may differ from original product

Drawings are for reference only and may differ from the product

## Technical Data

◉ Imperial ○ Metric

| | |
|---|---|
| Wheel Diameter | 5 " |
| Wheel Width | 1 " |
| Wheel Bearing | Wheel With Plain Bearing |
| Plate Size | 3-7/8 " x 2-3/4 " |
| Bolt Hole Spacing | 3 " x 1-13/16 " |
| Plate Hole | 3/8 " x 3/8 " |
| Offset | 1-1/2 " |
| Swivel Interference | 9 " |
| Overall Height | 6-9/16 " |
| Swivel Radius | 4-1/2 " |
| Hardness Of Tread | 82±5° Shore A |
| Load Capacity (Dynamic) | 154lbs |
| Load Capacity (Static) | 231lbs |
| Temperature | -4°F to +140°F |
| Fork Type | Swivel Caster With Total Brake |
| Stainless | N/A |
| Electrical Conductivity | N/A |
| Anti-Static | N/A |
| Weight | 1.8lbs |
| Standard | ISO22881 |

## Advantages at a glance

| | |
|---|---|
| Rolling Resistance | ● ● ● ● ○ |
| Operating Noise | ● ● ● ● ○ |
| Floor Surface Preservation | ● ● ● ● ● |

## Dimensions



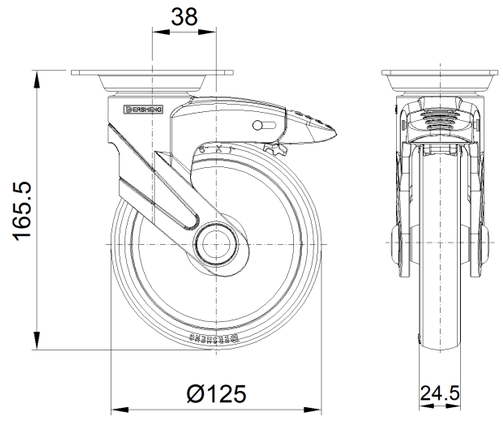


## Mounting



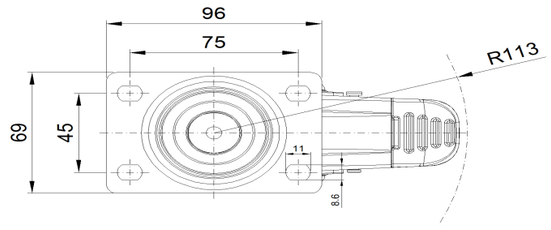


* For any deviation between metric and imperial spec, please refer to the metric spec.

© Copyright 2026 DershengInternational www.dersheng.com