1155 STAT Series Caster Series (All Plastic)

Classic PPR Wheel (Middle Tube Pearlescent Dark Gray) Wheel Diameter×Wheel Width 125×24.5mm

EAN

KS-11550502265243

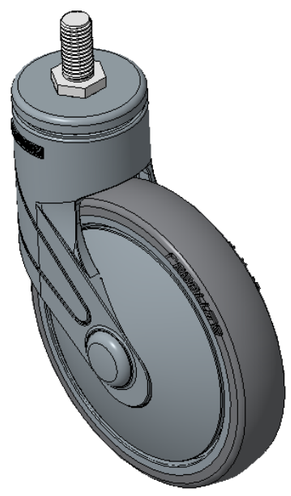

Picture may differ from original product

Drawings are for reference only and may differ from the product

Technical Data

◉ Imperial ○ Metric

Wheel Diameter	5 "
Wheel Width	1 "
Wheel Bearing	Wheel With Plain Bearing
Threaded Stem	M12
Threaded Length	1 "
Offset	1-1/2 "
Swivel Interference	8 "
Overall Height	6-1/2 "
Swivel Radius	4 "
Hardness Of Tread	82±5° Shore A
Load Capacity (Dynamic)	176lbs
Load Capacity (Static)	265lbs
Temperature	-4°F to +140°F
Fork Type	Swivel Caster
Stainless	N/A
Electrical Conductivity	N/A
Anti-Static	N/A
Weight	1.1lbs
Standard	ISO22881

Advantages at a glance

Rolling Resistance	●●●●○
Operating Noise	●●●●○
Floor Surface Preservation	●●●●●

Dimensions

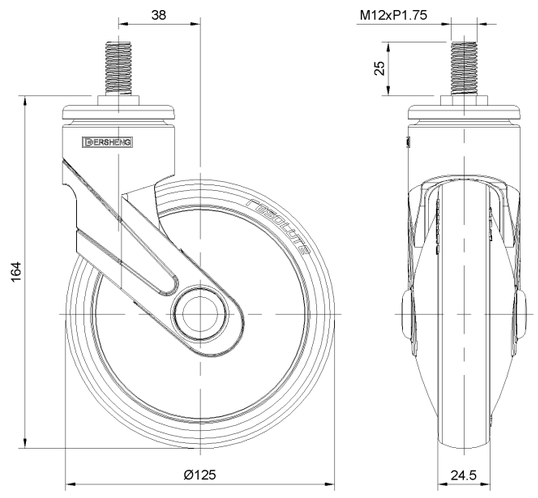

Mounting

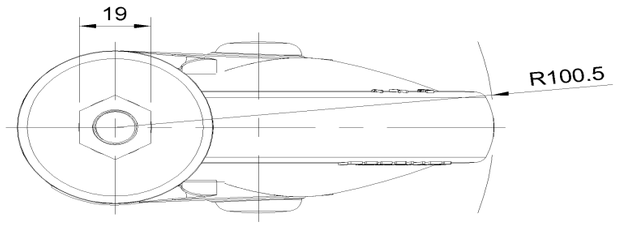

* For any deviation between metric and imperial spec, please refer to the metric spec.

© Copyright 2026 DershengInternational www.dersheng.com