Product Information Sheet

1155 STAT Series Caster Series (All Plastic)

Classic PPR Wheel (Middle Tube Pearlescent Dark Gray) Wheel Diameter×Wheel Width 125×31mm

EAN

KS-11550502269213

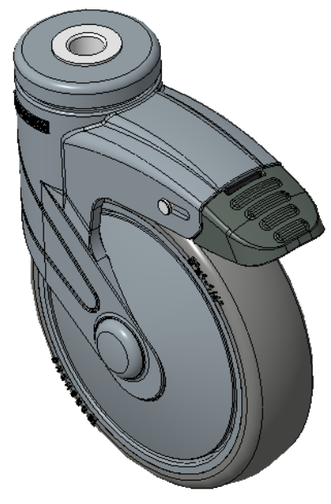

Picture may differ from original product

Casters with a long double-With locking system, hollow rivets—12 hollow holes
Pearl-finish legs made of polyamide reinforcement, lock-fit installation
Rust-proof, Corrosion resistant, Attractive appearance, Economical, and Smooth rotation
High-Quality Impact-Resistant Polypropylene Wheel Center, High-Quality Reinforced Polypropylene Rubber (TPR) Wheel Tread
Dark gray, wheels—Plain Bearing

Wheel tread: Thermoplastic rubber elastomer (TPR)

Wheel Center: Made of high-quality impact-resistant polypropylene

Drawings are for reference only and may differ from the product

Technical Data

◉ Imperial ○ Metric

Wheel Diameter	5 "
Wheel Width	1-1/4 "
Wheel Bearing	Wheel With Plain Bearing
Single Bolt HoleCentre Hole	1/2 "
Offset	1-1/2 "
Swivel Interference	9 "
Overall Height	6-1/2 "
Swivel Radius	4-1/2 "
Hardness Of Tread	82±5° Shore A
Load Capacity (Dynamic)	198lbs
Load Capacity (Static)	298lbs
Temperature	-4°F to +140°F
Fork Type	Swivel Caster With Total Brake
Stainless	N/A
Electrical Conductivity	N/A
Anti-Static	N/A
Weight	1.8lbs
Standard	ISO22883

Advantages at a glance

Rolling Resistance	● ● ● ● ○
Operating Noise	● ● ● ● ○
Floor Surface Preservation	● ● ● ● ●

Dimensions

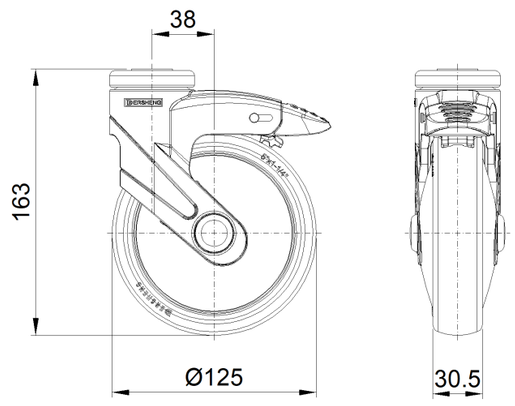

Mounting

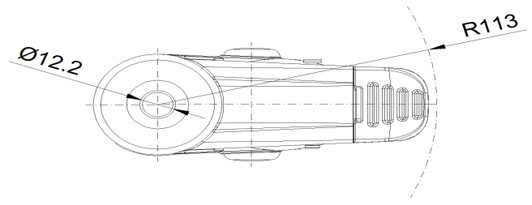

* For any deviation between metric and imperial spec, please refer to the metric spec.

© Copyright 2026 DershengInternational www.dersheng.com