Product Data Sheet

1155-1 Light Plastic-1 Series

PPR (black and black) Wheel Diameter x Wheel Width 125 x 31mm

EAN

KS-11550591268043

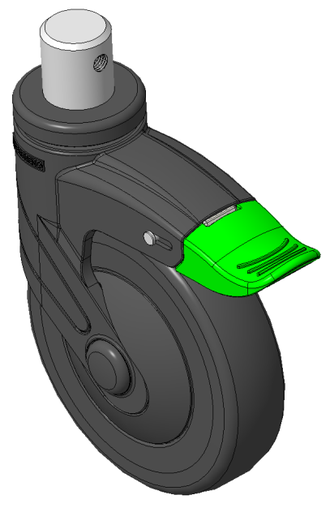

Picture may differ from original product

Casters with directional brake With locking system, pin-fit Ø28x30L
Black legs made of polyamide reinforced material, pin-mounted.
Rust-proof, Corrosion resistant, Attractive appearance, Economical, and allows for smooth rotation.
High-Quality Impact-Resistant Polypropylene Wheel Center, High-Quality Reinforced Polypropylene Rubber (TPR) Wheel Tread.
Black, Bearing—Ball Bearings.

Wheel tread: Thermoplastic rubber elastomer (TPR)

Wheel Center: Made of high-quality impact-resistant polypropylene

Drawings are for reference only and may differ from the product

Technical Data

◉ Imperial ○ Metric

Wheel Diameter	5 "
Wheel Width	1-1/4 "
Wheel Bearing	Wheels With Ball Bearings
Stem Diameter	1-1/8 "
Stem Length	1-3/16 "
Offset	1-1/2 "
Swivel Interference	10 "
Overall Height	6-1/2 "
Swivel Radius	5 "
Hardness Of Tread	82±5° Shore A
Load Capacity (Dynamic)	198lbs
Load Capacity (Static)	298lbs
Temperature	-4°F to +140°F
Fork Type	Swivel Caster With Directional Lock
Stainless	N/A
Electrical Conductivity	N/A
Anti-Static	N/A
Weight	2.0lbs
Standard	ISO22883

Advantages at a glance

Rolling Resistance	● ● ● ● ○
Operating Noise	● ● ● ● ○
Floor Surface Preservation	● ● ● ● ●

Dimensions

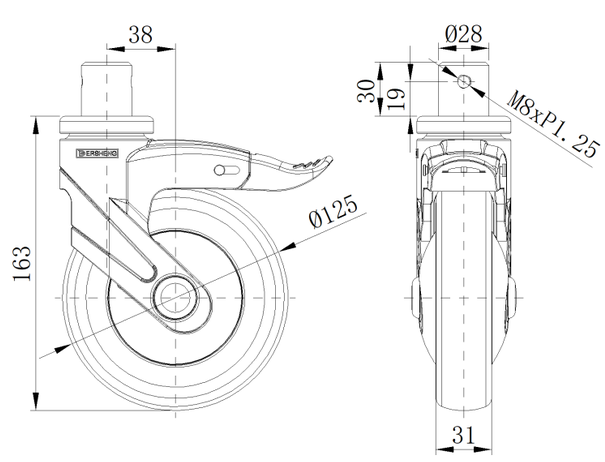

Mounting

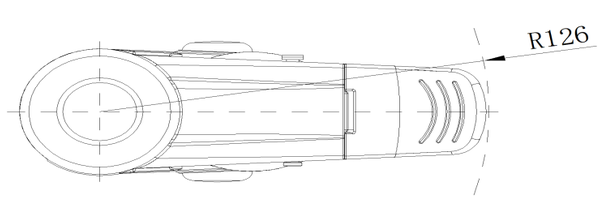

* For any deviation between metric and imperial spec, please refer to the metric spec.

© Copyright 2025 DershengInternational www.dersheng.com