Product Data Sheet

1155-1 Light Plastic-1 Series

PPR (black and black) Wheel Diameter x Wheel Width 125 x 24.5mm

EAN

KS-11550593268123

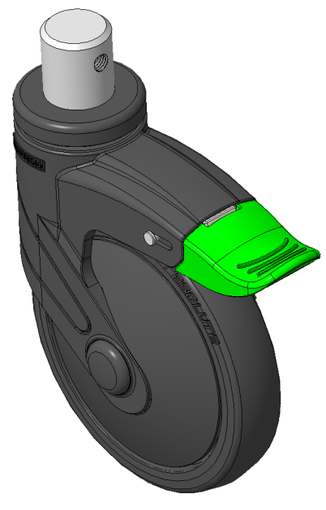

Picture may differ from original product

Casters with directional brake With locking system, pin-fit Ø28x30L
Black legs made of polyamide reinforced material, pin-mounted.
Rust-proof, Corrosion resistant, Attractive appearance, Economical, and allows for smooth rotation.
High-Quality Impact-Resistant Polypropylene Wheel Center, High-Quality Reinforced Polypropylene Rubber (TPR) Wheel Tread.
Black, Bearing—Ball Bearings.

Wheel tread: Thermoplastic rubber elastomer (TPR)

Wheel Center: Made of high-quality impact-resistant polypropylene

Drawings are for reference only and may differ from the product

Technical Data

◉ Metric ○ Imperial

Wheel Diameter	125mm
Wheel Width	24.5mm
Wheel Bearing	Wheels With Ball Bearings
Stem Diameter	28mm
Stem Length	30mm
Offset	38mm
Swivel Interference	252mm
Overall Height	163mm
Swivel Radius	126mm
Hardness Of Tread	82±5° Shore A
Load Capacity (Dynamic)	90kgs
Load Capacity (Static)	135kgs
Temperature	-20°C to +60°C
Fork Type	Swivel Caster With Directional Lock
Stainless	N/A
Electrical Conductivity	N/A
Anti-Static	N/A
Weight	0.80kgs
Standard	ISO22883

Advantages at a glance

Rolling Resistance	● ● ● ● ○
Operating Noise	● ● ● ● ○
Floor Surface Preservation	● ● ● ● ●

Dimensions

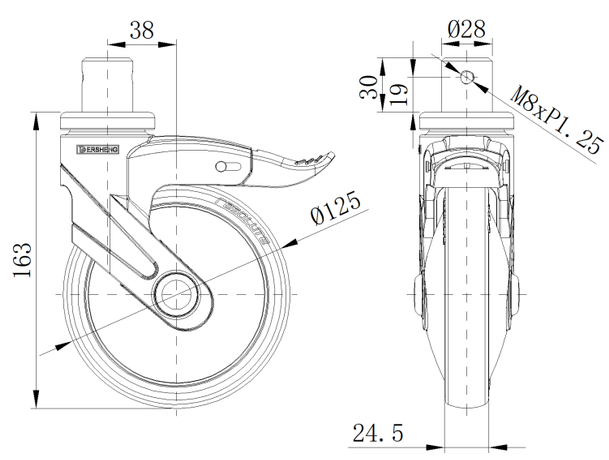

Mounting

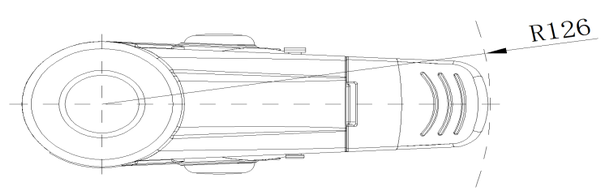

* For any deviation between metric and imperial spec, please refer to the metric spec.

© Copyright 2025 DershengInternational www.dersheng.com