Product Data Sheet

1156 56 Series Central Locking Caster Series

Resolute(white dark gray) Wheel Diameter x Wheel Width 125 x 31mm

EAN

KS-11560500458233

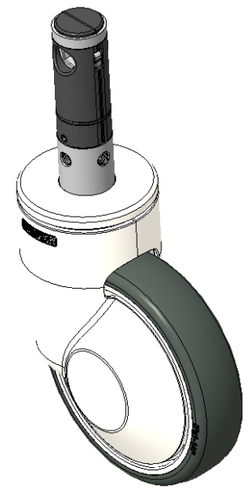

Picture may differ from original product

Long control lever, Hexagonal hole cam control, center-locked Total Brake or movable Caster
Steel plate frame, white exterior Decorative Plastic Cover
Rust-proof, Corrosion resistant, Attractive appearance, and rotates smoothly
High-Quality Impact-Resistant Polypropylene Wheel Center, High-Quality Reinforced Polypropylene Rubber (TPR) Wheel Tread
Dark gray, Bearing—Ball Bearings

Wheel tread: Thermoplastic rubber elastomer (TPR)

Wheel Center: Made of high-quality impact-resistant polypropylene

Drawings are for reference only and may differ from the product

Technical Data

◉ Metric ○ Imperial

Wheel Diameter	125mm
Wheel Width	31mm
Wheel Bearing	Wheels With Ball Bearings
Stem Diameter	28mm
Stem Length	96mm
Offset	35mm
Swivel Interference	195mm
Overall Height	158.5mm
Swivel Radius	97.5mm
Hardness Of Tread	72±5° Shore A
Load Capacity (Dynamic)	120kgs
Load Capacity (Static)	187.5kgs
Temperature	-20°C to +60°C
Fork Type	Swivel Caster With Total Brake
Stainless	N/A
Electrical Conductivity	N/A
Anti-Static	N/A
Weight	1.25kgs
Standard	ISO22883

Advantages at a glance

Rolling Resistance	● ● ● ● ●
Operating Noise	● ● ● ● ●
Floor Surface Preservation	● ● ● ● ●

Dimensions

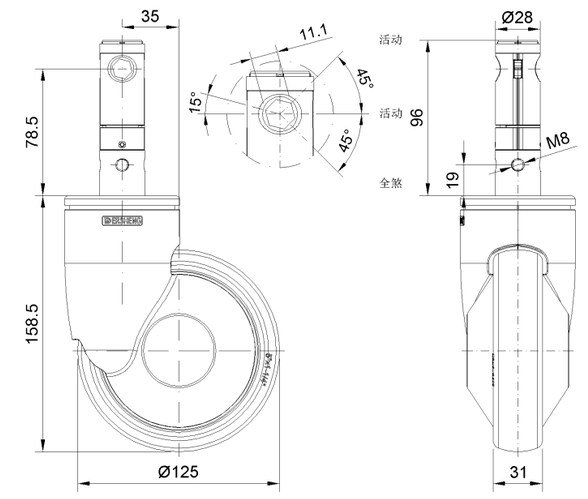

Mounting

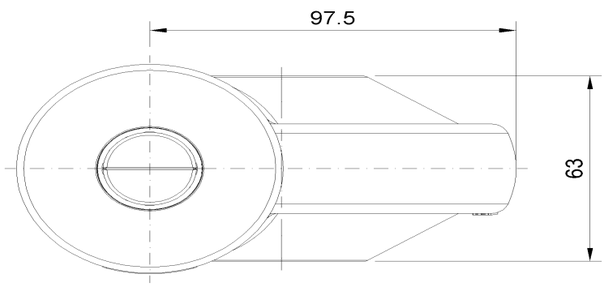

* For any deviation between metric and imperial spec, please refer to the metric spec.

© Copyright 2025 DershengInternational www.dersheng.com