Product Data Sheet

1156 56 Series Central Locking Caster Series

PPR E-Conductive (black-gray) Wheel Diameter × Wheel Width 150 x 31mm

EAN

KS-11560600268123

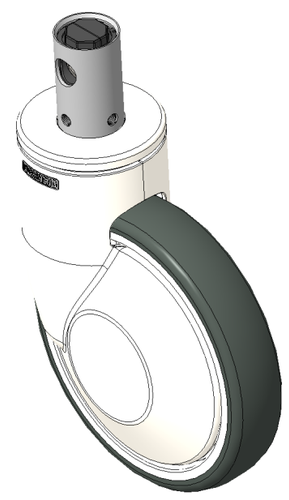

Picture may differ from original product

Casters with short-bar Hexagonal hole cam control, center-locking, full or directional brake.
Steel plate frame, white exterior Decorative Plastic Cover.
Rust-proof, Corrosion resistant, Attractive appearance, and rotates smoothly.
High-Quality Impact-Resistant Polypropylene Wheel Center, High-Quality Reinforced Polypropylene Rubber (TPR) Wheel Tread.
White/dark gray, Bearing—Ball Bearings.

Wheel tread: Thermoplastic rubber elastomer (TPR)

Wheel Center: Made of high-quality impact-resistant polypropylene

Drawings are for reference only and may differ from the product

Technical Data

◉ Imperial ○ Metric

Wheel Diameter	6 "
Wheel Width	1-1/4 "
Wheel Bearing	Wheels With Ball Bearings
Stem Diameter	1-5/16 "
Stem Length	2 "
Offset	1-5/8 "
Swivel Interference	9-1/8 "
Overall Height	7-5/16 "
Swivel Radius	4-9/16 "
Hardness Of Tread	82±5° Shore A
Load Capacity (Dynamic)	331lbs
Load Capacity (Static)	496lbs
Temperature	-4°F to +140°F
Fork Type	Swivel Caster With Total Brake
Stainless	N/A
Electrical Conductivity	N/A
Anti-Static	N/A
Weight	3.3lbs
Standard	ISO22881

Advantages at a glance

Rolling Resistance	● ● ● ● ○
Operating Noise	● ● ● ● ○
Floor Surface Preservation	● ● ● ● ●

Dimensions

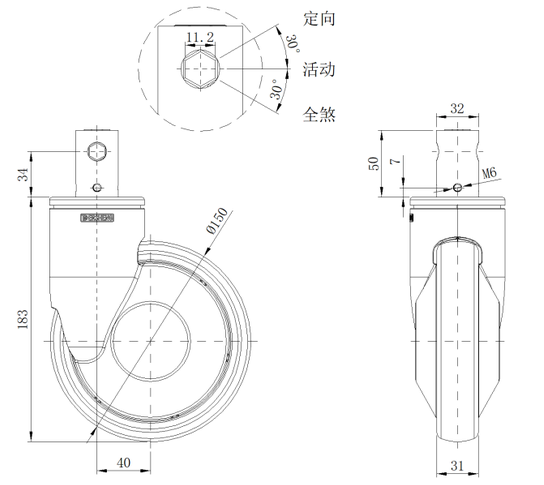

Mounting

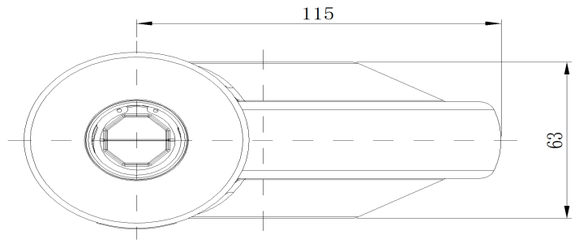

* For any deviation between metric and imperial spec, please refer to the metric spec.

© Copyright 2025 DershengInternational www.dersheng.com