Product Data Sheet

1156 56 Series Central Locking Caster Series

Resolute (white dark gray) Wheel Diameter x Wheel Width 150 x 31mm

EAN

KS-11560600458213

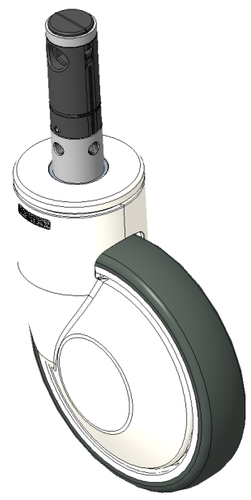

Picture may differ from original product

Center-locked, full-brake Caster with long control lever and Hexagonal hole cam control.
Steel plate frame with white exterior Decorative Plastic Cover.
Rust-proof, Corrosion resistant, Attractive appearance, and rotates smoothly.
High-Quality Impact-Resistant Polypropylene Wheel Center, High-Quality Reinforced Polypropylene Rubber (TPR) Wheel Tread.
White/dark gray, Bearing—Ball Bearings.

Wheel tread: Thermoplastic rubber elastomer (TPR)

Wheel Center: Made of high-quality impact-resistant polypropylene

Drawings are for reference only and may differ from the product

Technical Data

◉ Metric ○ Imperial

Wheel Diameter	150mm
Wheel Width	31mm
Wheel Bearing	Wheels With Ball Bearings
Stem Diameter	28mm
Stem Length	96mm
Offset	40mm
Swivel Interference	230mm
Overall Height	183mm
Swivel Radius	115mm
Hardness Of Tread	72±5° Shore A
Load Capacity (Dynamic)	150kgs
Load Capacity (Static)	225kgs
Temperature	-20°C to +60°C
Fork Type	Swivel Caster With Total Brake
Stainless	N/A
Electrical Conductivity	N/A
Anti-Static	N/A
Weight	1.47kgs
Standard	ISO22881

Advantages at a glance

Rolling Resistance	● ● ● ● ●
Operating Noise	● ● ● ● ●
Floor Surface Preservation	● ● ● ● ●

Dimensions

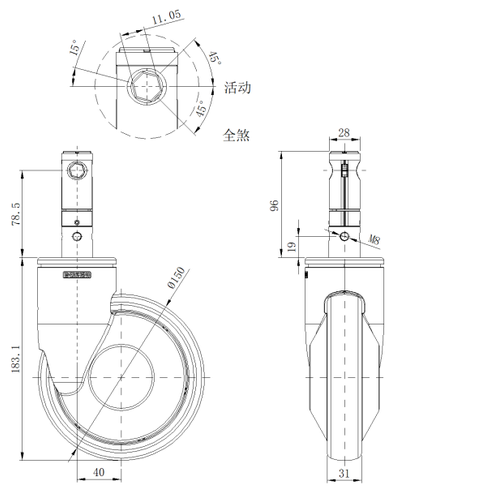

Mounting

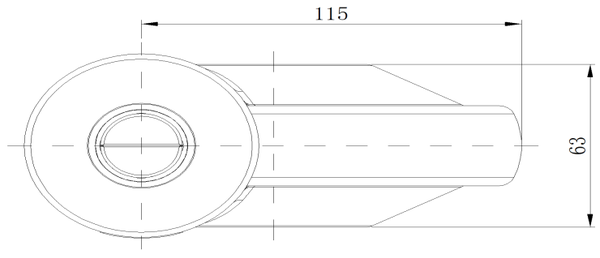

* For any deviation between metric and imperial spec, please refer to the metric spec.

© Copyright 2025 DershengInternational www.dersheng.com