Product Data Sheet

1157 57 Series Caster Series

DERSHENG
Dersheng Casters Keep Rolling

Non-marking NBR Rubber (milling) Wheel Diameter x Wheel Width 100 x 37mm

EAN

KS-11570400042041

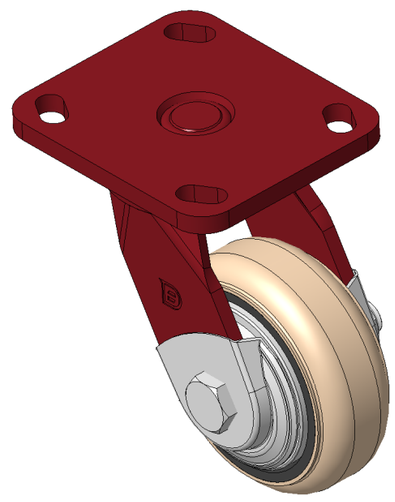

Picture may differ from original product

Swivel Casters, Welded Caster Fork Surface sprayed with red paint, Mounting Type - Top Plate, Hole spacing 85x70 Cast Iron Wheel Center, High-Quality high-Resilient Rubber Wheel Tread, Cast Iron original color Bearing—Ball Bearing, with special Anti-thread wheel covers

Wheel Tread: Made of high quality and high elastic rubber

Wheel Center: iron core/cast iron core

Drawings are for reference only and may differ from the product

Technical Data

◉ Metric ○ Imperial

Wheel Diameter	100mm
Wheel Width	37mm
Wheel Bearing	Wheels With Ball Bearings
Plate Size	115 x 100mm
Bolt Hole Spacing	85 x 70mm
Plate Hole	20 x 11mm
Offset	40.5mm
Swivel Interference	186mm
Overall Height	147mm
Swivel Radius	93mm
Hardness Of Tread	85±5° Shore A
Load Capacity (Dynamic)	200kgs
Load Capacity (Static)	300kgs
Temperature	-20°C to +80°C
Fork Type	Swivel Caster
Stainless	N/A
Electrical Conductivity	N/A
Anti-Static	N/A
Weight	2.68kgs
Standard	ISO22883

Advantages at a glance

Rolling Resistance	● ● ● ○ ○
Operating Noise	● ● ● ● ○
Floor Surface Preservation	● ● ● ● ○

Dimensions

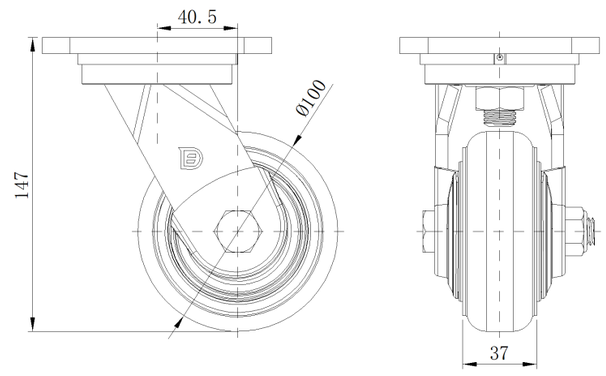

Mounting

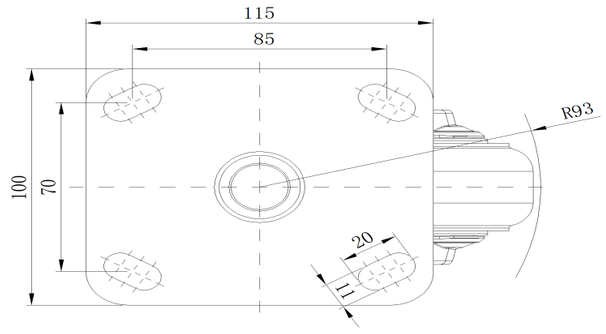

* For any deviation between metric and imperial spec, please refer to the metric spec.

© Copyright 2025 DershengInternational www.dersheng.com