Product Data Sheet

1157 57 Series Caster Series

QPU (brown flat) Wheel Diameter × Wheel Width 100 x 34mm

EAN

KS-11570400531021

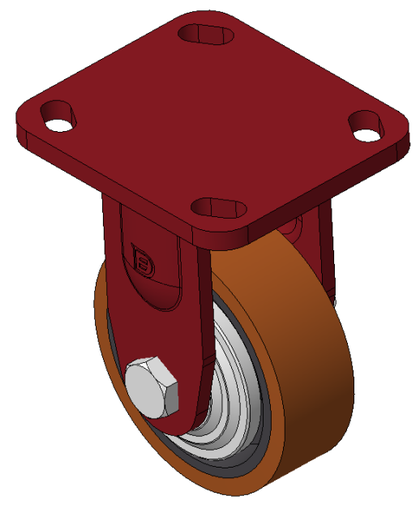

Picture may differ from original product

Rigid Caster, Welded Caster Fork Red painted surface, Top Plate Mounting Type, Hole spacing 85x70 Cast Iron Wheel Center, high quality polyurethane Wheel Tread, Cast Iron brown Bearing - Ball Bearing

Wheel tread: High quality polyurethane wheel tread

Wheel Center: iron core/cast iron core

Drawings are for reference only and may differ from the product

Technical Data

◉ Imperial ○ Metric

Wheel Diameter	4 "
Wheel Width	1-3/8 "
Wheel Bearing	Wheels With Ball Bearings
Plate Size	4-9/16 " x 4 "
Bolt Hole Spacing	3-3/8 " x 2-3/4 "
Plate Hole	13/16 " x 3/8 "
Overall Height	5-7/8 "
Hardness Of Tread	92±5° Shore A
Load Capacity (Dynamic)	849lbs
Load Capacity (Static)	1273lbs
Temperature	-4°F to +158°F
Fork Type	Rigid Caster
Stainless	N/A
Electrical Conductivity	N/A
Anti-Static	N/A
Weight	4.5lbs
Standard	ISO22883

Advantages at a glance

Rolling Resistance	● ● ● ● ●
Operating Noise	● ● ● ● ●
Floor Surface Preservation	● ● ● ● ●

Dimensions

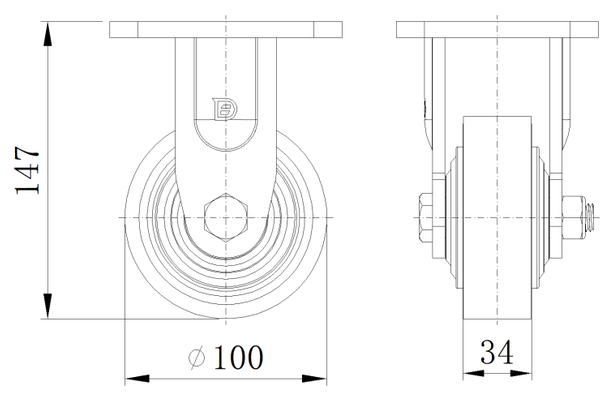

Mounting

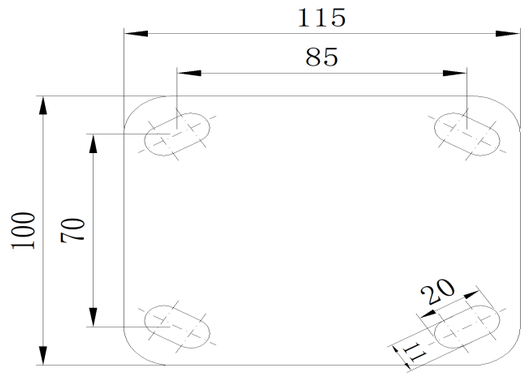

* For any deviation between metric and imperial spec, please refer to the metric spec.

© Copyright 2025 DershengInternational www.dersheng.com