Product Information Sheet

# 1157 57 Series Caster Series

PU (Red Flat) Wheel Diameter × Wheel Width 150 × 42 mm

EAN

KS-11570600334051

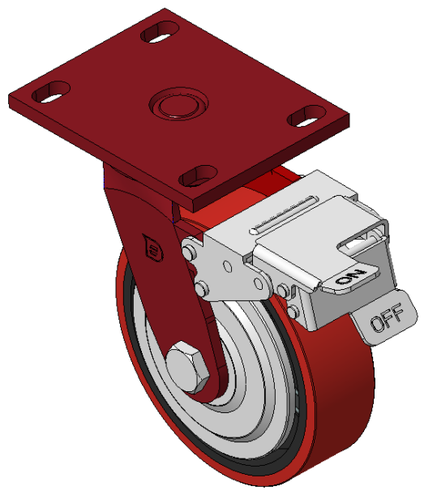


Picture may differ from original product

Features front-brake, locking Casters; Welded Caster Fork.
Red paint finish; Mounting Type - Top Plate; 110x75mm Bolt Hole Spacing.
Cast Iron Wheel Center; High Quality Polyurethane Wheel Tread; Cast Iron red finish.
Bearings—Ball Bearings.

Wheel Tread: Hhigh-Quality Polyurethane

Wheel Center: Iron core / Cast iron core

Drawings are for reference only and may differ from the product

## Technical Data

◉ Metric ○ Imperial

| | |
|---|---|
| Wheel Diameter | 150mm |
| Wheel Width | 42mm |
| Wheel Bearing | Wheels With Ball Bearings |
| Plate Size | 138 x 108mm |
| Bolt Hole Spacing | 110x75mm |
| Plate Hole | 22 x 13mm |
| Offset | 42mm |
| Swivel Interference | 320mm |
| Overall Height | 197mm |
| Swivel Radius | 160mm |
| Hardness Of Tread | 93±5° Shore A |
| Load Capacity (Dynamic) | 410kgs |
| Load Capacity (Static) | 615kgs |
| Temperature | -20°C to +70°C |
| Fork Type | Swivel Caster With Front Brake |
| Stainless | N/A |
| Electrical Conductivity | N/A |
| Anti-Static | N/A |
| Weight | 4.39kgs |
| Standard | ISO22883 |

## Advantages at a glance

| | |
|---|---|
| Rolling Resistance | ● ● ● ○ ○ |
| Operating Noise | ● ● ● ● ○ |
| Floor Surface Preservation | ● ● ● ● ○ |

## Dimensions

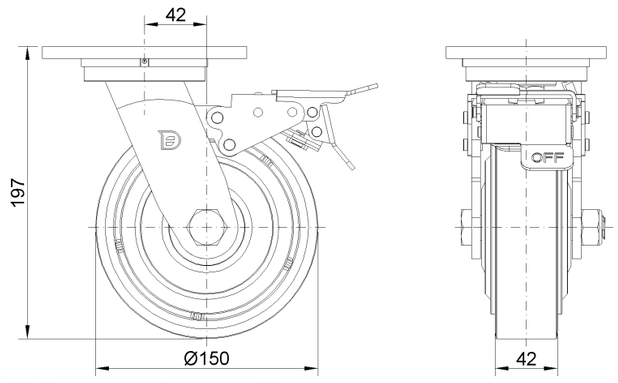


## Mounting

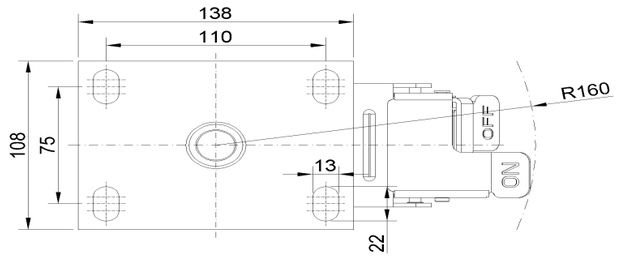


* For any deviation between metric and imperial spec, please refer to the metric spec.

© Copyright 2026 DershengInternational www.dersheng.com