Product Information Sheet

1157 57 Series Caster Series

PU (Red Flat) Wheel Diameter × Wheel Width 150 × 42 mm

EAN

KS-11570600334051

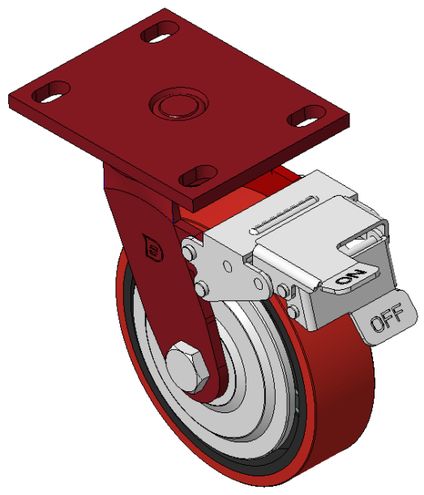

Picture may differ from original product

Features front-brake, locking Casters; Welded Caster Fork.
Red paint finish; Mounting Type - Top Plate; 110x75mm Bolt Hole Spacing.
Cast Iron Wheel Center; High Quality Polyurethane Wheel Tread; Cast Iron red finish.
Bearings—Ball Bearings.

Wheel Tread: Hhigh-Quality Polyurethane

Wheel Center: Iron core / Cast iron core

Drawings are for reference only and may differ from the product

Technical Data

◉ Imperial ○ Metric

Wheel Diameter	6 "
Wheel Width	1-11/16 "
Wheel Bearing	Wheels With Ball Bearings
Plate Size	5-1/2 " x 4-5/16 "
Bolt Hole Spacing	4-5/16 " x3”
Plate Hole	7/8 " x 9/16 "
Offset	1-11/16 "
Swivel Interference	12-11/16 "
Overall Height	7-7/8 "
Swivel Radius	6-3/8 "
Hardness Of Tread	93±5° Shore A
Load Capacity (Dynamic)	904lbs
Load Capacity (Static)	1356lbs
Temperature	-4°F to +158°F
Fork Type	Swivel Caster With Front Brake
Stainless	N/A
Electrical Conductivity	N/A
Anti-Static	N/A
Weight	9.7lbs
Standard	ISO22883

Advantages at a glance

Rolling Resistance	● ● ● ○ ○
Operating Noise	● ● ● ● ○
Floor Surface Preservation	● ● ● ● ○

Dimensions

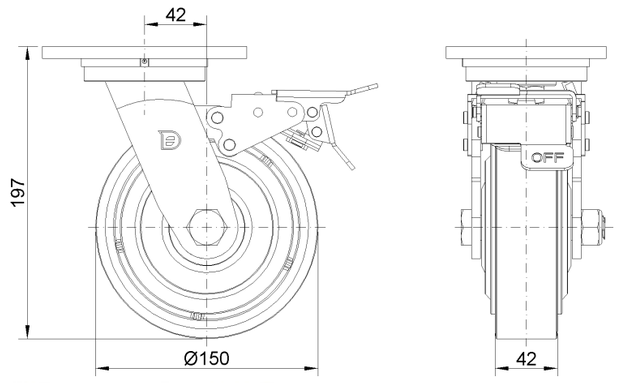

Mounting

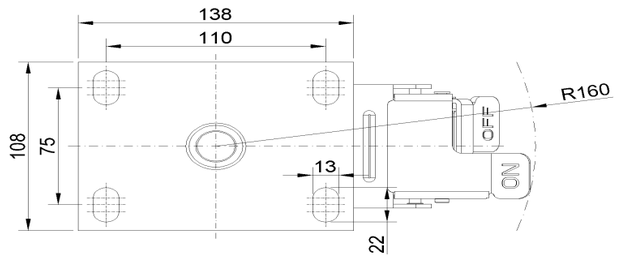

* For any deviation between metric and imperial spec, please refer to the metric spec.

© Copyright 2026 DershengInternational www.dersheng.com