Product Data Sheet

1157 57 Series Caster Series

QPU (Brown round) Wheel Diameter × Wheel Width 150 x 42mm

EAN

KS-11570600534111A

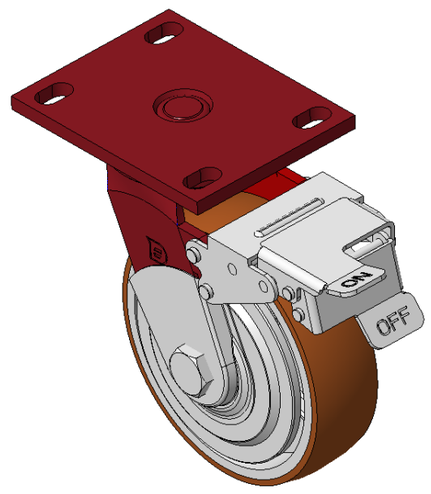

Picture may differ from original product

Equipped with front brake, With locking system Casters, Welded Caster Fork
Red paint finish, Mounting Type - Top Plate, 110x75mm Bolt Hole Spacing
Cast Iron Wheel Center, High Quality Polyurethane Wheel Tread, Cast Iron brown
Ball Bearing bearings, with specially designed anti-winding wheel caps

Wheel Tread: Hhigh-Quality Polyurethane

Wheel Center: Iron core / Cast iron core

Drawings are for reference only and may differ from the product

Technical Data

◉ Metric ○ Imperial

Wheel Diameter	150mm
Wheel Width	42mm
Wheel Bearing	Wheels With Ball Bearings
Plate Size	138 x 108mm
Bolt Hole Spacing	110x75mm
Plate Hole	22 x 13mm
Offset	42mm
Swivel Interference	320mm
Overall Height	197mm
Swivel Radius	160mm
Hardness Of Tread	92±5° Shore A
Load Capacity (Dynamic)	550kgs
Load Capacity (Static)	825kgs
Temperature	-20°C to +70°C
Fork Type	Swivel Caster With Front Brake
Stainless	N/A
Electrical Conductivity	N/A
Anti-Static	N/A
Weight	4.42kgs
Standard	ISO22883

Advantages at a glance

Rolling Resistance	● ● ● ● ●
Operating Noise	● ● ● ● ●
Floor Surface Preservation	● ● ● ● ●

Dimensions

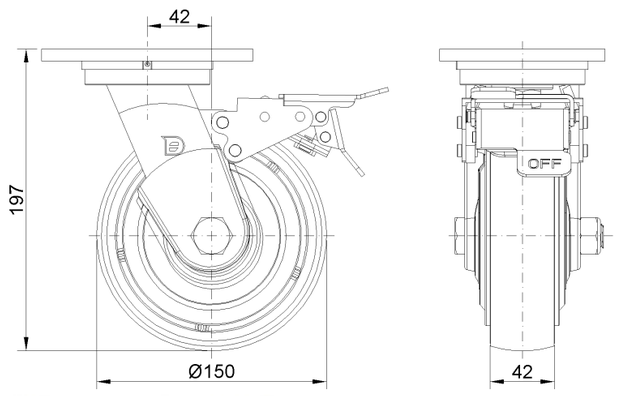

Mounting

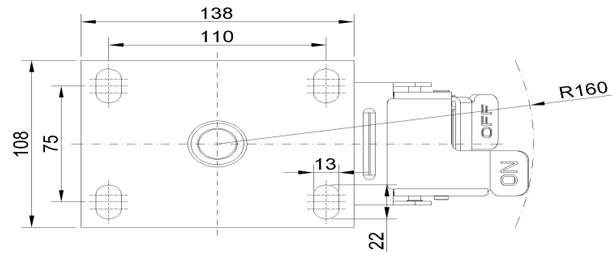

* For any deviation between metric and imperial spec, please refer to the metric spec.

© Copyright 2026 DershengInternational www.dersheng.com