Product Data Sheet

# 1157 57 Series Caster Series

MRC (Transparent) Wheel Diameter x Wheel Width 200 x 50mm

EAN

KS-11570800074081

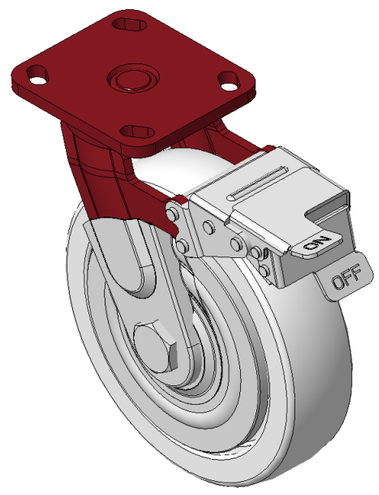


Picture may differ from original product

Casters with front brake and With locking system, Welded Caster Fork Red painted finish, Mounting Type - Top Plate, 85x70 Bolt Hole Spacing Reinforced Polypropylene Wheel Center, natural Wheel Tread Bearings—Ball Bearings with special anti-twist wheel covers

Wheel tread: Thermoplastic (PA6)

Wheel Center: Thermoplastic (PA6)

Drawings are for reference only and may differ from the product

## Technical Data

◉ Metric ○ Imperial

| | |
|---|---|
| Wheel Diameter | 200mm |
| Wheel Width | 50mm |
| Wheel Bearing | Wheels With Ball Bearings |
| Plate Size | 115 x 100mm |
| Bolt Hole Spacing | 85 x 70mm |
| Plate Hole | 20 x 11mm |
| Offset | 55mm |
| Swivel Interference | 376mm |
| Overall Height | 240mm |
| Swivel Radius | 188mm |
| Hardness Of Tread | 75±5° Shore D |
| Load Capacity (Dynamic) | 450kgs |
| Load Capacity (Static) | 675kgs |
| Temperature | -20°C to +80°C |
| Fork Type | Swivel Caster With Front Brake |
| Stainless | N/A |
| Electrical Conductivity | N/A |
| Anti-Static | N/A |
| Weight | 4.20kgs |
| Standard | ISO22883 |

## Advantages at a glance

| | |
|---|---|
| Rolling Resistance | ● ● ● ● ● |
| Operating Noise | ● ● ○ ○ ○ |
| Floor Surface Preservation | ● ● ○ ○ ○ |

## Dimensions

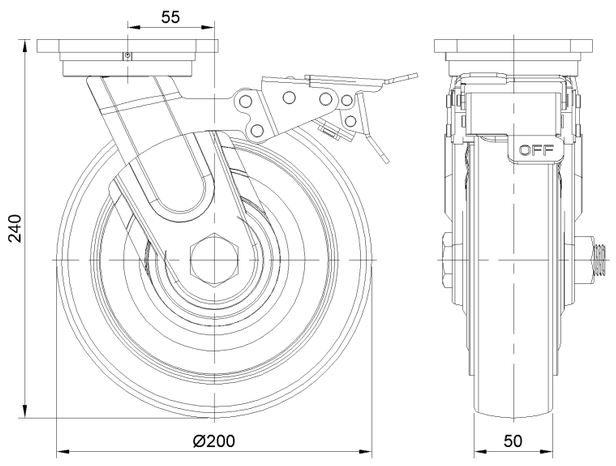


## Mounting




* For any deviation between metric and imperial spec, please refer to the metric spec.

© Copyright 2025 DershengInternational www.dersheng.com