Product Data Sheet

1157 57 Series Caster Series

QPU (brown round) Wheel Diameter x Wheel Width 200 x 50mm

EAN

KS-11570800534111

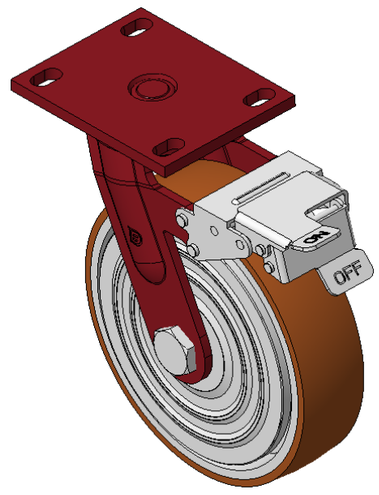

Picture may differ from original product

Features front-brake, locking Casters; Welded Caster Fork.
Red paint finish; Mounting Type - Top Plate; 110x75mm Bolt Hole Spacing.
Cast Iron wheel Wheel Wheel Hub; High Quality Polyurethane Wheel Tread; Cast Iron brown finish.
Bearings—Ball Bearings.

Wheel Tread: Hhigh-Quality Polyurethane

Wheel Center: Iron core / Cast iron core

Drawings are for reference only and may differ from the product

Technical Data

◉ Metric ○ Imperial

Wheel Diameter	200mm
Wheel Width	050mm
Wheel Bearing	Wheels With Ball Bearings
Plate Size	138 x 108mm
Bolt Hole Spacing	110x75mm
Plate Hole	22 x 13mm
Offset	55mm
Swivel Interference	356mm
Overall Height	248mm
Swivel Radius	178mm
Hardness Of Tread	92±5° Shore A
Load Capacity (Dynamic)	720kgs
Load Capacity (Static)	1080kgs
Temperature	-20°C to +70°C
Fork Type	Swivel Caster With Front Brake
Stainless	N/A
Electrical Conductivity	N/A
Anti-Static	N/A
Weight	6.31kgs
Standard	ISO22883

Advantages at a glance

Rolling Resistance	● ● ● ● ●
Operating Noise	● ● ● ● ●
Floor Surface Preservation	● ● ● ● ●

Dimensions

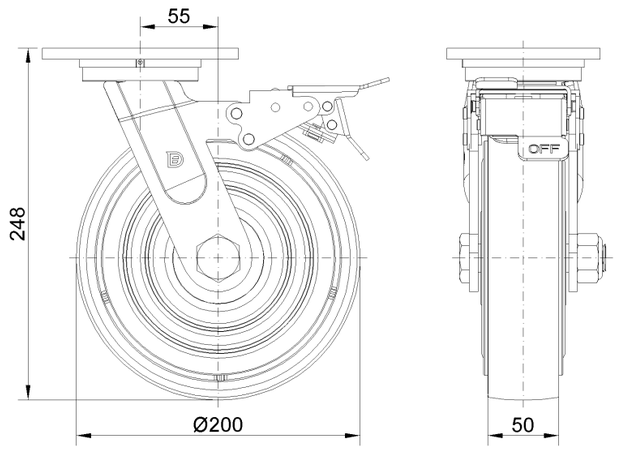

Mounting

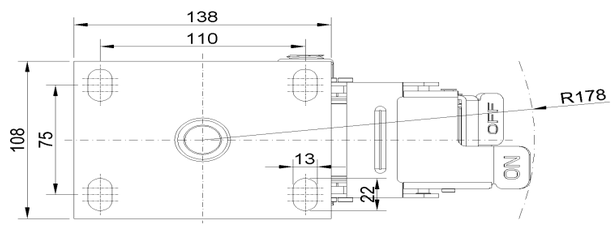

* For any deviation between metric and imperial spec, please refer to the metric spec.

© Copyright 2026 DershengInternational www.dersheng.com