Product Data Sheet

1157 57 Series Caster Series

VQPU (brown round) Wheel Diameter x Wheel Width 200 x 50mm

EAN

KS-11570800542141

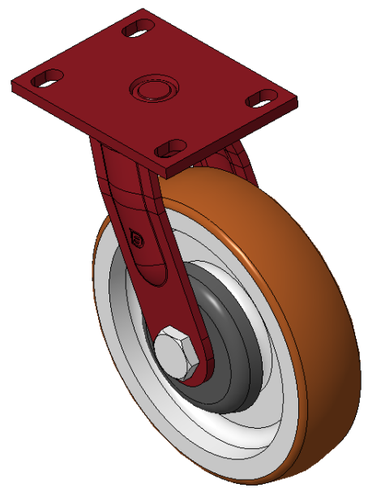

Picture may differ from original product

Portable Casters, Welded Caster Fork, red paint finish
Base plate Mounting Type device, Bolt Hole Spacing 110 x 75
Cast Iron Wheel Center, High Quality Polyurethane Wheel Tread, Cast Iron brown
Bearings—Ball Bearings

Wheel Tread: Hhigh-Quality Polyurethane
Wheel Center: Iron core / Cast iron core

Drawings are for reference only and may differ from the product

Technical Data

◉ Metric ○ Imperial

Wheel Diameter	200mm
Wheel Width	50mm
Wheel Bearing	Wheels With Ball Bearings
Plate Size	138 x 108mm
Bolt Hole Spacing	110x75mm
Plate Hole	22 x 13mm
Offset	55mm
Swivel Interference	314mm
Overall Height	248mm
Swivel Radius	157mm
Hardness Of Tread	92±5° Shore A
Load Capacity (Dynamic)	750kgs
Load Capacity (Static)	1125kgs
Temperature	-20°C to +70°C
Fork Type	Swivel Caster
Stainless	N/A
Electrical Conductivity	N/A
Anti-Static	N/A
Weight	7.35kgs
Standard	ISO22883

Advantages at a glance

Rolling Resistance	● ● ● ● ●
Operating Noise	● ● ● ● ●
Floor Surface Preservation	● ● ● ● ●

Dimensions

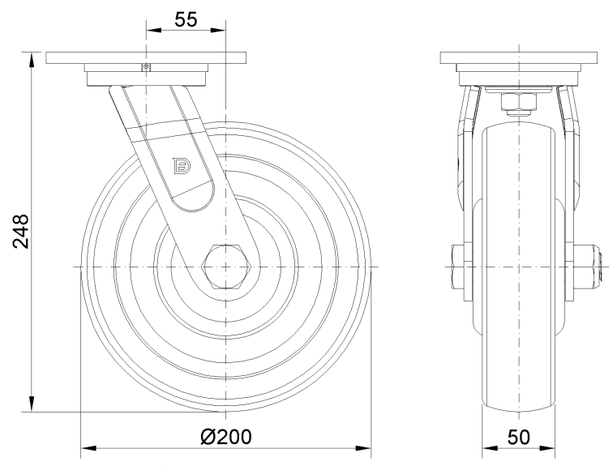

Mounting

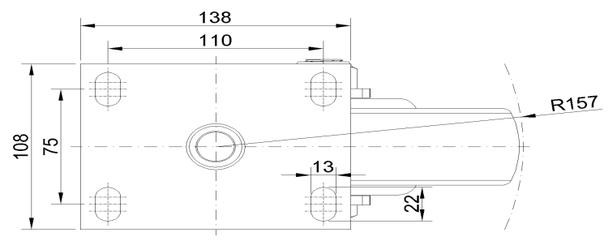

* For any deviation between metric and imperial spec, please refer to the metric spec.

© Copyright 2026 DershengInternational www.dersheng.com