1165-3 AMR/AGV-3 Double Precision Ball Bearing Caster (Medium Duty) Series

AQPU (Grey round) Wheel Diameter × Wheel Width 75 x 30mm

EAN

KS-11650303601033

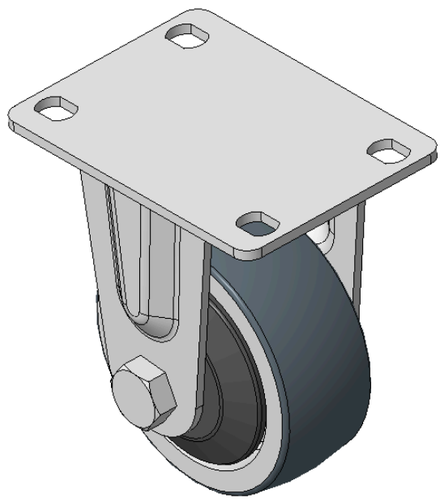

Picture may differ from original product

Drawings are for reference only and may differ from the product

Technical Data

◉ Metric ○ Imperial

Wheel Diameter	75mm
Wheel Width	30mm
Wheel Bearing	Wheels With Ball Bearings
Plate Size	92 x 68mm
Bolt Hole Spacing	75 x 45mm
Plate Hole	11 x 8.6mm
Overall Height	102.5mm
Hardness Of Tread	77±5° Shore A
Load Capacity (Dynamic)	150kgs
Load Capacity (Static)	225kgs
Temperature	-20°C to +70°C
Fork Type	Rigid Caster
Stainless	N/A
Electrical Conductivity	N/A
Anti-Static	N/A
Weight	0.98kgs
Standard	ISO22883

Advantages at a glance

Rolling Resistance	●●●●●
Operating Noise	●●●●●
Floor Surface Preservation	●●●●●

Dimensions

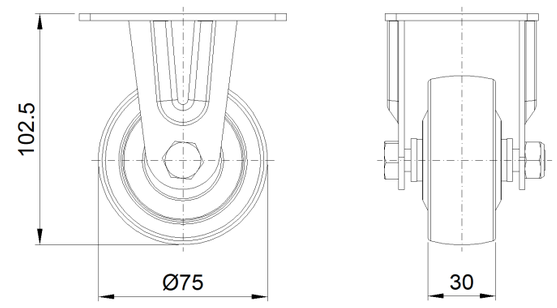

Mounting

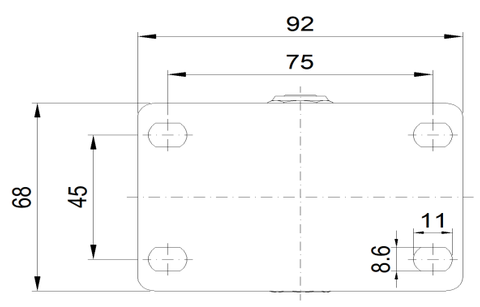

* For any deviation between metric and imperial spec, please refer to the metric spec.

© Copyright 2026 DershengInternational www.dersheng.com