# 1165-4 1165 Series — AMR/AGV-4 Single Precision Ball Bearing Caster (Medium Duty)Series

PPR Conductive Wheel (Dark Gray/Light Gray) Wheel Diameter×Wheel Width 75.5×24mm

EAN

KS-11650304172333

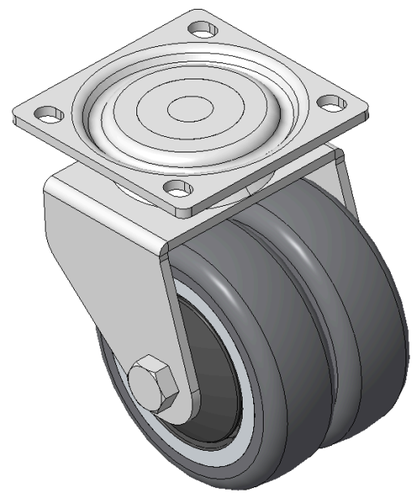

Picture may differ from original product

Drawings are for reference only and may differ from the product

## Technical Data

◉ Metric ○ Imperial

| | |
|---|---|
| Wheel Diameter | 75mm |
| Wheel Width | 24mm |
| Wheel Bearing | Wheels With Ball Bearings |
| Plate Size | 68 x 68mm |
| Bolt Hole Spacing | 55 x 52mm |
| Plate Hole | 8.5 x 6.5mm |
| Offset | 20mm |
| Swivel Interference | 124mm |
| Overall Height | 98mm |
| Swivel Radius | 62mm |
| Hardness Of Tread | 87±5° Shore A |
| Load Capacity (Dynamic) | 60kgs |
| Load Capacity (Static) | 90kgs |
| Temperature | -20°C to +60°C |
| Fork Type | Swivel Caster |
| Stainless | N/A |
| Electrical Conductivity | Y 10^3/～10^4/Ω |
| Anti-Static | N/A |
| Weight | 1.86kgs |
| Standard | ISO22883 |

## Advantages at a glance

| | |
|---|---|
| Rolling Resistance | ●●●●○ |
| Operating Noise | ●●●●○ |
| Floor Surface Preservation | ●●●●● |

## Dimensions

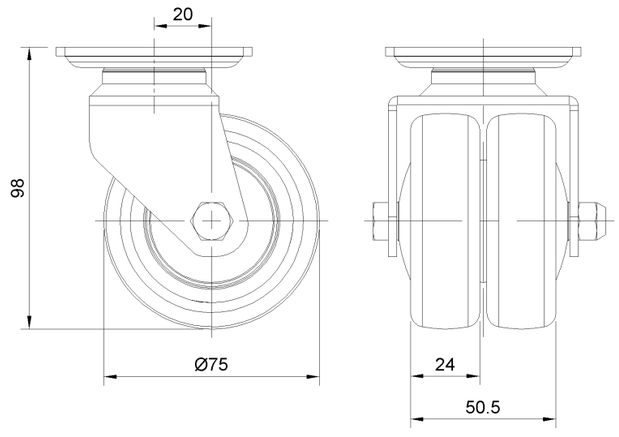


## Mounting

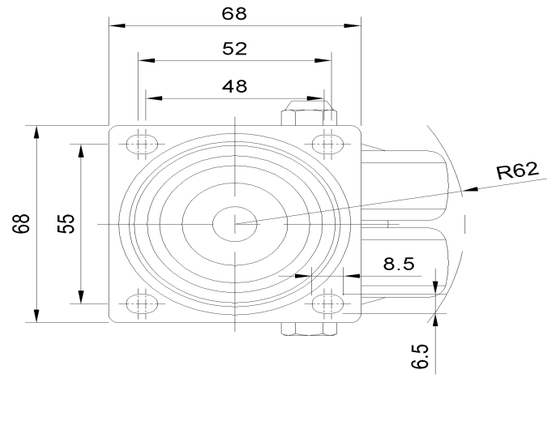


* For any deviation between metric and imperial spec, please refer to the metric spec.

© Copyright 2026 DershengInternational www.dersheng.com