1165-4 1165 Series — AMR/AGV-4 Single Precision Ball Bearing Caster (Medium Duty)Series

Classic Resolute (Pearlescent Dark Gray) Wheel Diameter×Wheel Width 75.5×24mm

EAN

KS-11650304452323

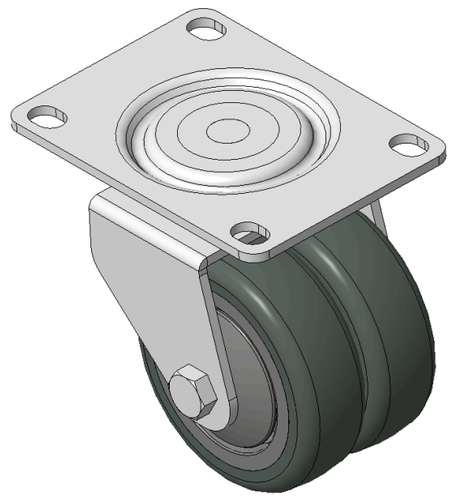

Picture may differ from original product

Drawings are for reference only and may differ from the product

Technical Data

◉ Metric ○ Imperial

Wheel Diameter	75mm
Wheel Width	24mm
Wheel Bearing	Wheels With Ball Bearings
Plate Size	103 x 76mm
Bolt Hole Spacing	80 x 60mm
Plate Hole	12 x 9mm
Offset	20mm
Swivel Interference	124mm
Overall Height	98mm
Swivel Radius	62mm
Hardness Of Tread	87±5° Shore A
Load Capacity (Dynamic)	90kgs
Load Capacity (Static)	135kgs
Temperature	-20°C to +60°C
Fork Type	Swivel Caster
Stainless	N/A
Electrical Conductivity	N/A
Anti-Static	N/A
Weight	1.92kgs
Standard	ISO22883

Advantages at a glance

Rolling Resistance	●●●●○
Operating Noise	●●●●○
Floor Surface Preservation	●●●●●

Dimensions

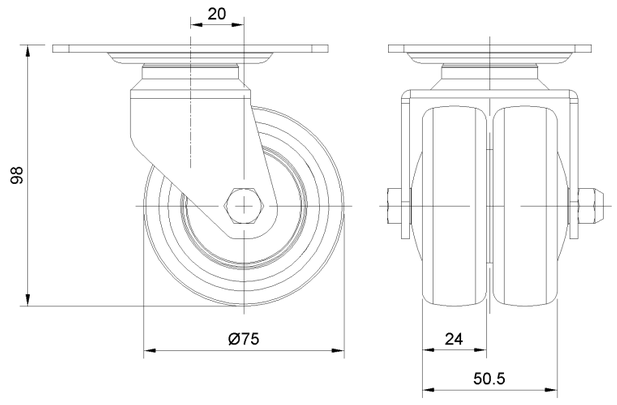

Mounting

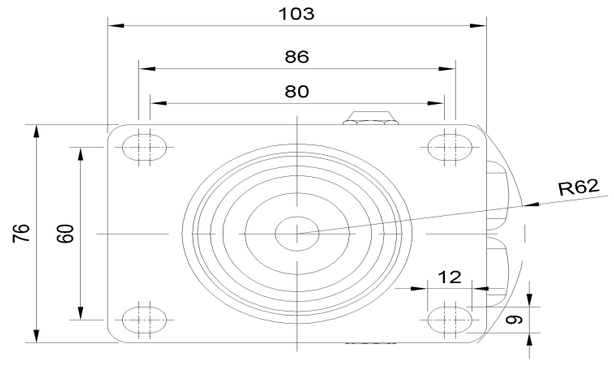

* For any deviation between metric and imperial spec, please refer to the metric spec.

© Copyright 2026 DershengInternational www.dersheng.com