1165-5 AMR/AGV- 5 Pressed Steel Caster - Single Wheel Series (Medium/Light Duty)

Anti-static HPU (black round) Wheel Diameter x Wheel Width 72 x 30 mm

EAN

KS-11650305752233

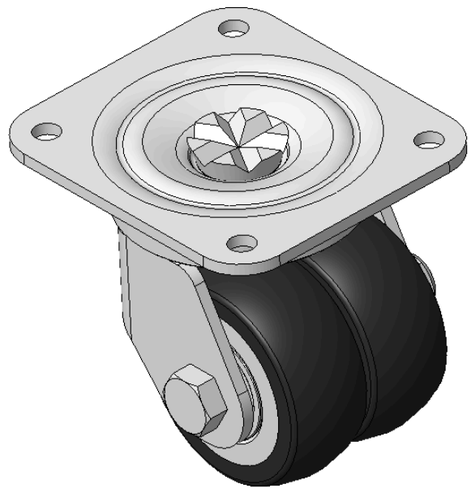

Picture may differ from original product

Drawings are for reference only and may differ from the product

Technical Data

◉ Metric ○ Imperial

Wheel Diameter	72mm
Wheel Width	30mm
Wheel Bearing	Wheels With Ball Bearings
Plate Size	110 x 100mm
Bolt Hole Spacing	85 x 75mm
Plate Hole	9mm
Offset	21.7mm
Swivel Interference	140mm
Overall Height	100mm
Swivel Radius	70mm
Hardness Of Tread	92±5° Shore A
Load Capacity (Dynamic)	300kgs
Load Capacity (Static)	450kgs
Temperature	-20°C to +70°C
Fork Type	Swivel Caster
Stainless	N/A
Electrical Conductivity	N/A
Anti-Static	Y 10^6/~10^9/Ω
Weight	2.73kgs
Standard	ISO22883

Advantages at a glance

Rolling Resistance	●●●●●
Operating Noise	●●●●○
Floor Surface Preservation	●●●●●

Dimensions

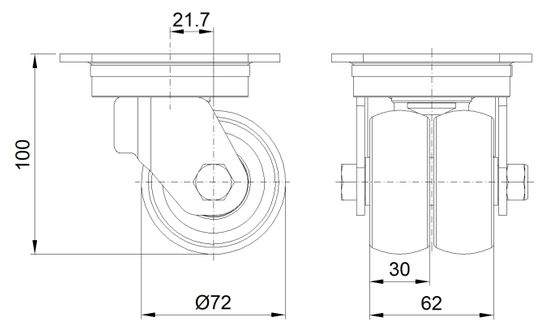

Mounting

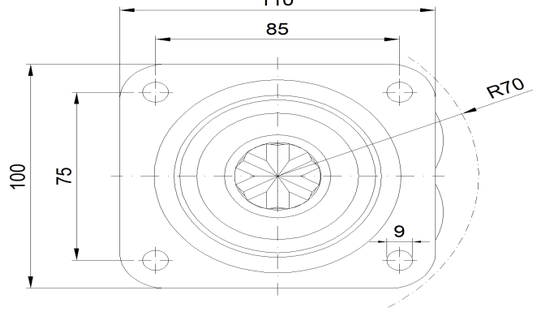

* For any deviation between metric and imperial spec, please refer to the metric spec.

© Copyright 2026 DershengInternational www.dersheng.com