1165-4 1165 Series — AMR/AGV-4 Single Precision Ball Bearing Caster (Medium Duty)Series

PPR Conductive Wheel (Dark Gray/Light Gray) Wheel Diameter×Wheel Width 100×31mm

EAN

KS-11650404172013

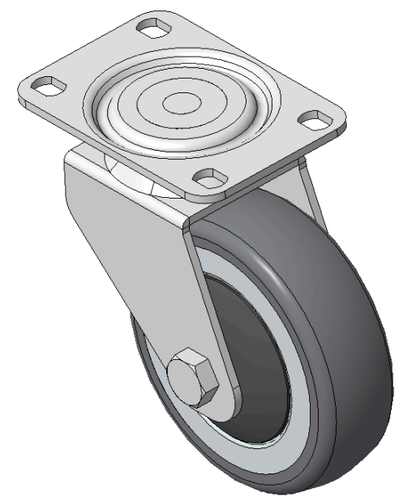

Picture may differ from original product

Drawings are for reference only and may differ from the product

Technical Data

◉ Metric ○ Imperial

Wheel Diameter	100mm
Wheel Width	31mm
Wheel Bearing	Wheels With Ball Bearings
Plate Size	92 x 66mm
Bolt Hole Spacing	75 x 45mm
Plate Hole	11.1 x 8.6mm
Offset	32mm
Swivel Interference	170mm
Overall Height	125mm
Swivel Radius	85mm
Hardness Of Tread	87±5° Shore A
Load Capacity (Dynamic)	80kgs
Load Capacity (Static)	120kgs
Temperature	-20°C to +60°C
Fork Type	Swivel Caster
Stainless	N/A
Electrical Conductivity	Y 10^3/～10^4/Ω
Anti-Static	N/A
Weight	2.09kgs
Standard	ISO22883

Advantages at a glance

Rolling Resistance	●●●●○
Operating Noise	●●●●○
Floor Surface Preservation	●●●●●

Dimensions

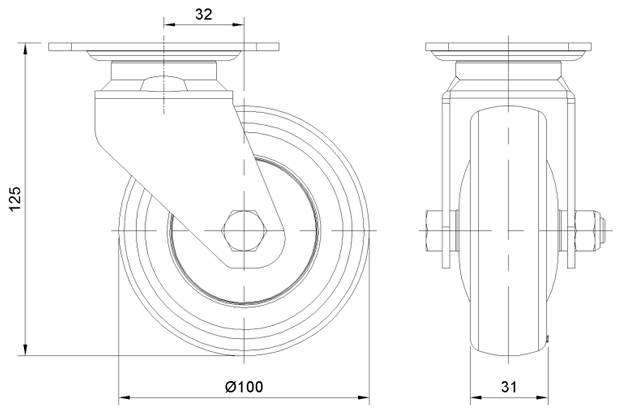

Mounting

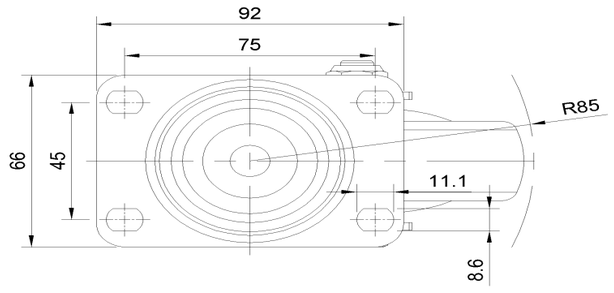

* For any deviation between metric and imperial spec, please refer to the metric spec.

© Copyright 2026 DershengInternational www.dersheng.com