1165-5 AMR/AGV- 5 Pressed Steel Caster - Single Wheel Series (Medium/Light Duty)

QPU (brown flat) Wheel Diameter x Wheel Width 80 x 35 mm

EAN

KS-11652305302333

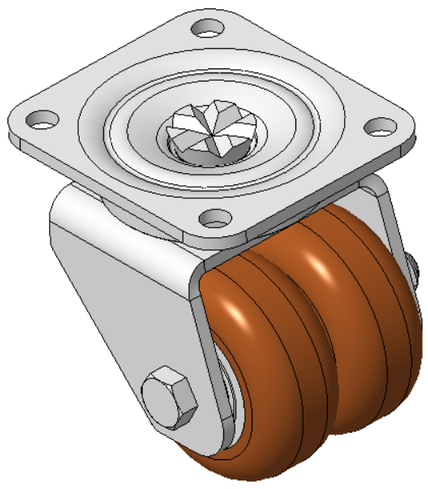

Picture may differ from original product

Drawings are for reference only and may differ from the product

Technical Data

◉ Metric ○ Imperial

Wheel Diameter	80mm
Wheel Width	35mm
Wheel Bearing	Wheels With Ball Bearings
Plate Size	110 x 100mm
Bolt Hole Spacing	85 x 75mm
Plate Hole	11mm
Offset	23mm
Swivel Interference	146mm
Overall Height	114mm
Swivel Radius	73mm
Hardness Of Tread	92±5° Shore A
Load Capacity (Dynamic)	200kgs
Load Capacity (Static)	300kgs
Temperature	-20°C to +70°C
Fork Type	Swivel Caster
Stainless	N/A
Electrical Conductivity	N/A
Anti-Static	N/A
Weight	2.59kgs
Standard	ISO22883

Advantages at a glance

Rolling Resistance	●●●●●
Operating Noise	●●●●●
Floor Surface Preservation	●●●●●

Dimensions

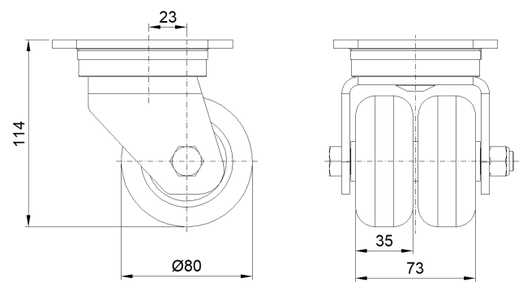

Mounting

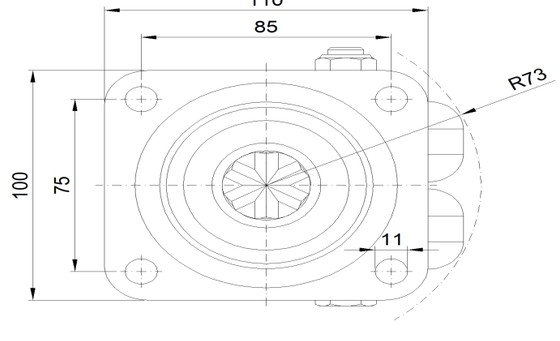

* For any deviation between metric and imperial spec, please refer to the metric spec.

© Copyright 2026 DershengInternational www.dersheng.com