1165-1 Heavy Duty AMR/AGV Spring-Loading Caster Wheel Series

Antistatic ZQPU Wheel (Milled Black) Wheel Diameter × Wheel Width 62.5 × 20 (41.5) mm

EAN

KS-11655200802723

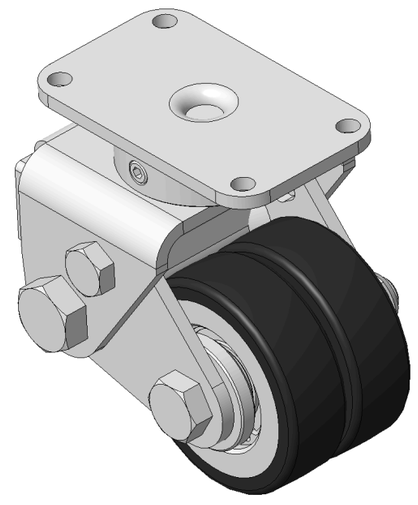

Drawings are for reference only and may differ from the product

Picture may differ from original product

Technical Data

◉ Metric ○ Imperial

Wheel Diameter	62.5mm
Wheel Width	20mm
Wheel Bearing	Wheels With Ball Bearings
Plate Size	84 x 51mm
Bolt Hole Spacing	70 x 37mm
Plate Hole	6.5mm
Offset	22mm
Swivel Interference	120mm
Overall Height	100mm
Swivel Radius	60mm
Hardness Of Tread	85±5° Shore A
Load Capacity (Dynamic)	200kgs
Load Capacity (Static)	300kgs
Temperature	-20°C to +70°C
Fork Type	Swivel Caster
Stainless	N/A
Electrical Conductivity	N/A
Anti-Static	Y 10^6/~10^9/Ω
Weight	1.58kgs
Standard	ISO22883

Advantages at a glance

Rolling Resistance	●●●●●
Operating Noise	●●●●●
Floor Surface Preservation	●●●●●

Dimensions

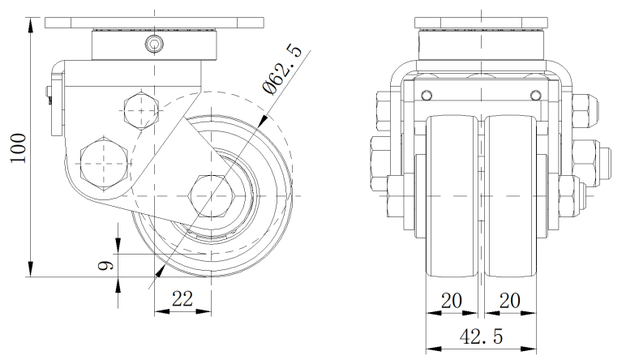

Mounting

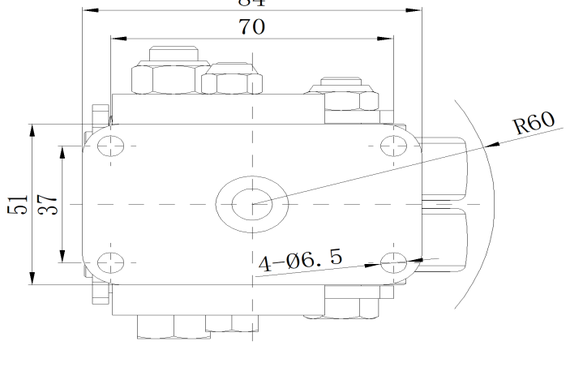

* For any deviation between metric and imperial spec, please refer to the metric spec.

© Copyright 2026 DershengInternational www.dersheng.com