1165-3 AMR/AGV-3 Double Precision Ball Bearing Caster (Medium Duty) Series

Antistatic ZQPU Wheel (Milled Black) Wheel Diameter × Wheel Width 62.5 × 20 (41.5) mm

EAN

KS-11655203802713

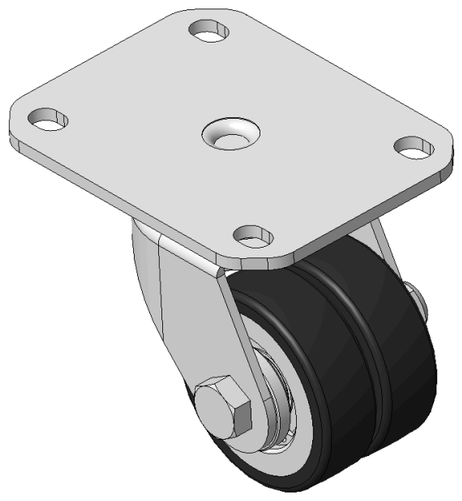

Picture may differ from original product

Drawings are for reference only and may differ from the product

Technical Data

◉ Imperial ○ Metric

Wheel Diameter	2-1/2 "
Wheel Width	13/16 "
Wheel Bearing	Wheels With Ball Bearings
Plate Size	4-3/8 " x 3-7/16 "
Bolt Hole Spacing	3-3/16 " x 2-7/16 "
Plate Hole	1/2 " x 23/64 "
Offset	1-1/16 "
Swivel Interference	5-3/16 "
Overall Height	3-3/4 "
Swivel Radius	2-9/16 "
Hardness Of Tread	77±5° Shore A
Load Capacity (Dynamic)	331lbs
Load Capacity (Static)	496lbs
Temperature	-4°F to +158°F
Fork Type	Swivel Caster
Stainless	N/A
Electrical Conductivity	N/A
Anti-Static	Y 10^6/~10^9/Ω
Weight	3.5lbs
Standard	ISO22883

Advantages at a glance

Rolling Resistance	●●●●●
Operating Noise	●●●●●
Floor Surface Preservation	●●●●●

Dimensions

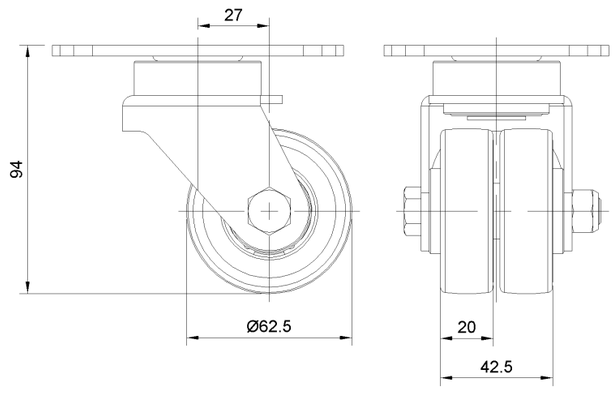

Mounting

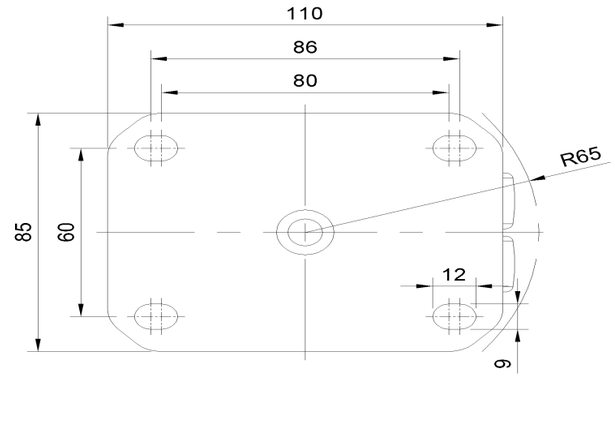

* For any deviation between metric and imperial spec, please refer to the metric spec.

© Copyright 2026 DershengInternational www.dersheng.com