1165-4 1165 Series — AMR/AGV-4 Single Precision Ball Bearing Caster (Medium Duty)Series

Classic Resolute (Pearlescent Dark Gray) Wheel Diameter × Wheel Width 62.5 × 23.5mm

EAN

KS-11655204452223

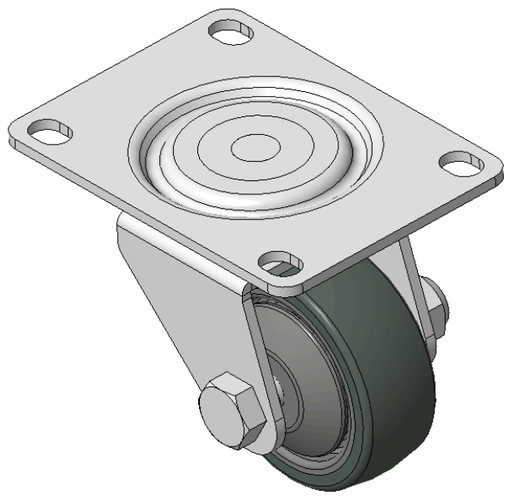

Picture may differ from original product

Drawings are for reference only and may differ from the product

Technical Data

◉ Metric ○ Imperial

Wheel Diameter	62.5mm
Wheel Width	23.5mm
Wheel Bearing	Wheels With Ball Bearings
Plate Size	103 x 76mm
Bolt Hole Spacing	80 x 60mm
Plate Hole	12 x 9mm
Offset	20mm
Swivel Interference	124mm
Overall Height	85mm
Swivel Radius	62mm
Hardness Of Tread	72±5° Shore A
Load Capacity (Dynamic)	50kgs
Load Capacity (Static)	75kgs
Temperature	-20°C to +60°C
Stainless	N/A
Electrical Conductivity	N/A
Anti-Static	N/A
Weight	1.32kgs
Standard	ISO22883

Advantages at a glance

Rolling Resistance	●●●●●
Operating Noise	●●●●●
Floor Surface Preservation	●●●●●

Dimensions

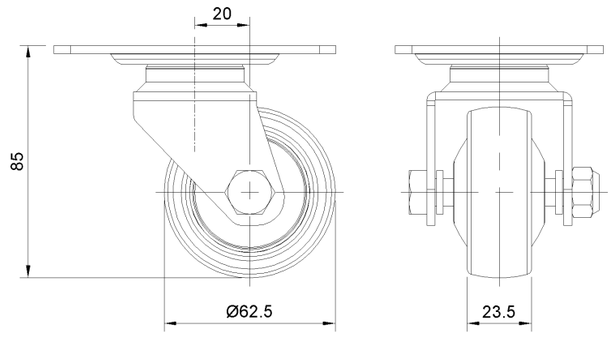

Mounting

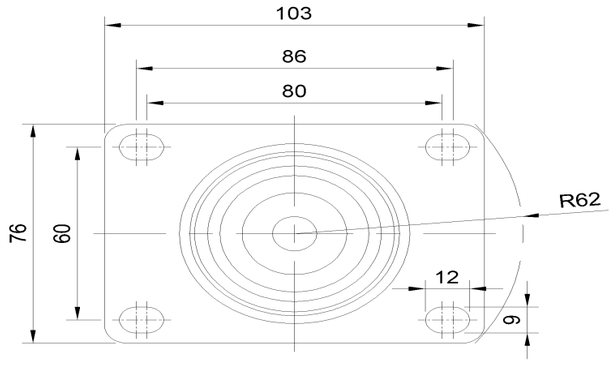

* For any deviation between metric and imperial spec, please refer to the metric spec.

© Copyright 2026 DershengInternational www.dersheng.com