AMR/AGV- 7 Shock Absorbing Caster (Medium Duty)

HPU (brown orange yellow) Wheel Diameter x Wheel Width 62.5 x 45mm

EAN

KS-11655207762911A

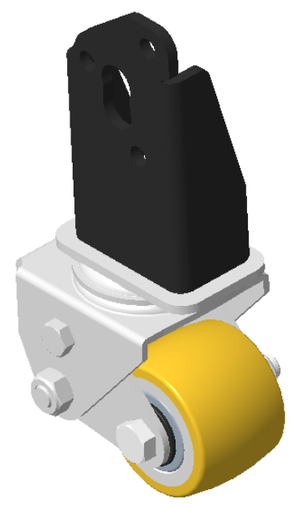

Picture may differ from original product

Drawings are for reference only and may differ from the product

Technical Data

◉ Metric ○ Imperial

Wheel Diameter	62.5mm
Wheel Width	45mm
Wheel Bearing	Wheels With Ball Bearings
Plate Size	79 x 50mm
Bolt Hole Spacing	51x68.75mm
Plate Hole	
Offset	24mm
Swivel Interference	116mm
Overall Height	100mm
Swivel Radius	58mm
Hardness Of Tread	92±5° Shore A
Load Capacity (Dynamic)	200kgs
Load Capacity (Static)	300kgs
Temperature	-20°C to +70°C
Fork Type	Swivel Caster
Stainless	N/A
Electrical Conductivity	N/A
Anti-Static	N/A
Weight	2.18kgs
Standard	ISO22883

Advantages at a glance

Rolling Resistance	●●●●●
Operating Noise	●●●●●
Floor Surface Preservation	●●●●●

Dimensions

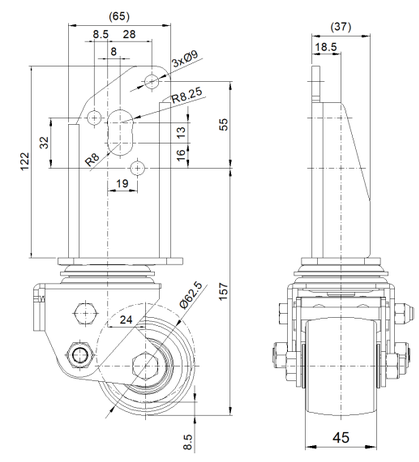

Mounting

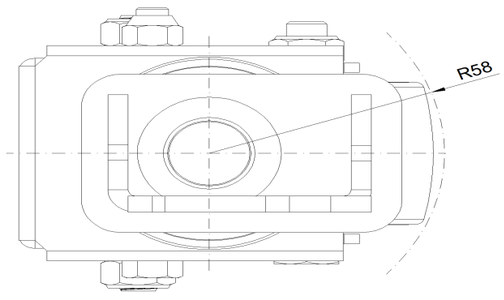

* For any deviation between metric and imperial spec, please refer to the metric spec.

© Copyright 2026 DershengInternational www.dersheng.com