AMR/AGV- 7 Shock Absorbing Caster (Medium Duty)

HPU (brown orange yellow) Wheel Diameter x Wheel Width 62.5 x 45mm

EAN

KS-11655207762911A

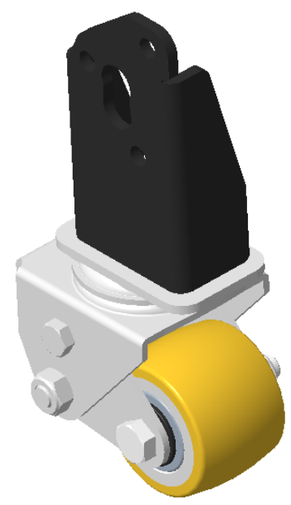

Picture may differ from original product

Drawings are for reference only and may differ from the product

Technical Data

◉ Imperial ○ Metric

Wheel Diameter	2-1/2 "
Wheel Width	1-13/16 "
Wheel Bearing	Wheels With Ball Bearings
Plate Size	3-1/8 " x 2 "
Bolt Hole Spacing	
Plate Hole	
Offset	1 "
Swivel Interference	4-5/8 "
Overall Height	4 "
Swivel Radius	2-5/16 "
Hardness Of Tread	92±5° Shore A
Load Capacity (Dynamic)	441lbs
Load Capacity (Static)	661lbs
Temperature	-4°F to +158°F
Fork Type	Swivel Caster
Stainless	N/A
Electrical Conductivity	N/A
Anti-Static	N/A
Weight	4.8lbs
Standard	ISO22883

Advantages at a glance

Rolling Resistance	●●●●●
Operating Noise	●●●●●
Floor Surface Preservation	●●●●●

Dimensions

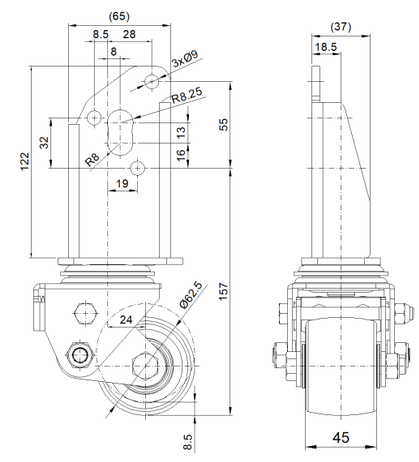

Mounting

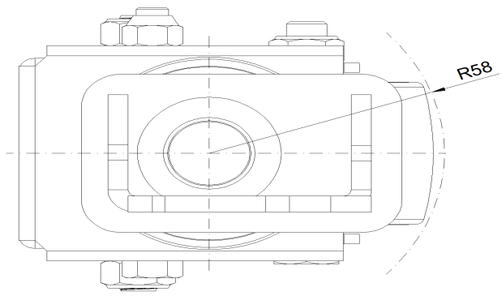

* For any deviation between metric and imperial spec, please refer to the metric spec.

© Copyright 2026 DershengInternational www.dersheng.com